ruukki
more with metals

Cladding systems with liner trays

Product description

Loading tables, fire resistance, installation instruction

We offer a wide range of high quality and durable liner trays. Diversified depth and load bearing capacity allow to use them as load bearing elements of sandwich walls. Ruukki's liner trays are applied as internal elements of sandwich walls with thermal insulation. Horizontal positioning and fastening directly to columns increases stability of the structure and eliminates the need of secondary structure – spandrel beams.

Product application

- production halls
- warehouses
- sports halls
- commercial buildings
- exhibition halls
- office buildings
- administration buildings

Ruukki is a metal expert you can rely on all the way, whenever you need metal based materials, components, systems or total solutions. We constantly develop our product range and operating models to match your needs.

CPL 00.000 EN/07.2008

Table of contents

Technical information 4
Applications 4
Production technology 4
Organic coatings 6
Corrosion resistance 6
Fire resistance of buildings 7
Acoustic insulation 13
Thermal insulation 17
Packaging 20
Transport 21
Mechanical unloading 22
Manual unloading 23
Storage 23
Assembly instruction 24
Loading and characteristics tables (Ostrava/Żyrardów) 36
Loading and characteristics tables (Biatorbagy) 44

- **Detailed solutions of envelope made of liner trays**

LT-01-01 Ruukki LT100-600S. Section 50
LT-01-02 Ruukki LT125-600S. Section 51
LT-01-03 Ruukki LT150-600S. Section 52
LT-01-04 Ruukki LT200-600S. Section 53
LT-01-06 Ruukki LT100-600SB. Section 54
LT-01-07 Ruukki LT125-600SB. Section 55
LT-01-08 Ruukki LT150-600SB. Section 56
LT-01-05 Starting liner trays. Sections 57
LT-02-01 Liner tray. Assembly details – 1 58
LT-02-02 Liner tray. Assembly – vertical section 59
LT-02-03 Liner tray. Assembly – front view 60
LT-02-04 Liner tray. Assembly – horizontal section 61
LT-03-01 Liner tray. Overall view – details 62
LT-03-02 Liner tray. Assembly – vertical section 1 63
LT-03-03 Liner tray. Assembly – vertical section 2 64
LT-03-04 Liner tray. Assembly – vertical section 3 65
LT-03-05 Liner tray. Assembly – vertical section 4 66
LT-03-06 Liner tray. Assembly – vertical section 5 67
LT-03-07 Liner tray. Assembly – vertical section 6 68
LT-03-08 Liner tray. Assembly – horizontal section 1 69
LT-03-09 Liner tray. Assembly – horizontal section 2 70
LT-03-10 Liner tray. Assembly – horizontal section 3 71
LT-03-11 Liner tray. Assembly – external corner 1 72
LT-03-12 Liner tray. Assembly – external corner 2 73
LT-03-13 Liner tray. Assembly – external corner 3 74
LT-03-14 Liner tray. Assembly – external corner 4 75
LT-03-15 Liner tray. Assembly – internal corner 1 76
LT-03-16 Liner tray. Assembly – internal corner 2 77
LT-03-17 Liner tray. Assembly – internal corner 3 78
LT-03-18 Liner tray. Assembly – internal corner 4 79
LT-04-01 Liner tray. Assembly – vertical section 1.
Perforated liner tray 80
LT-04-02 Liner tray. Assembly – vertical section 2.
Perforated liner tray 81
LT-05-01 Liner tray. Assembly – ground beam 1 82
LT-05-02 Liner tray. Assembly – ground beam 2 83
LT-05-03 Liner tray. Assembly – ground beam 3 84
LT-05-04 Liner tray. Assembly – ground beam 4 85
LT-06-01 Liner tray. Assembly – eaves 1 86
LT-06-02 Liner tray. Assembly – eaves 2 87
LT-07-01 Liner tray. Assembly – window 1. Vertical section 88
LT-07-02 Liner tray. Assembly – window 2. Vertical section 89
LT-07-03 Liner tray. Assembly – window 3. Vertical section 90
LT-07-04 Liner tray. Assembly – window 4. Vertical section 91
LT-07-05 Liner tray. Assembly – gate. Horizontal section 92
LT-08-01 Liner tray. Fire resistance EI 30. Section 93
LT-08-02 Liner tray. Fire resistance EI 60. Section 94
LT-08-03 Liner tray. Fire resistance EI 60. Section 95
LT-09-01 Liner tray. Acoustic insulation Rw=44 dB. Section 96
LT-09-02 Liner tray. Acoustic insulation Rw=42 dB. Section 97
LT-09-03 Liner tray. Acoustic insulation Rw=42 dB. Section 98
LT-09-04 Liner tray. Acoustic insulation Rw=33 dB.
Absorption class A. Section 99

- **Technical information**

Liner trays are cold-formed on roll bending machines. Steel sheet with thickness from 0.75 mm to 1.5 mm, galvanized on both sides with zinc layer 100 g/m^2 or 275 g/m^2 is used as raw material for production. Used steel grades are S320GD + Z100 or S320GD + Z275 in accordance with PN-EN 10326 standard, with a yield point f_y=320 MPa, coil-coated with organic coating SP 15 µm or 25 µm in accordance with PN-EN 10169-1 standard.

Production process and the highest quality of raw material guarantee good load-bearing capacity and profile rigidity allowing for increase of span distances (columns, frames).

Sheet calculations were made according to ENV 1993-1-3 standard. Loading tables include typical span distances in 1-span structure. Tables provide information enabling designers to make individual loading calculations in case of non-standard applications.

Wide product portfolio includes the following types of liner trays:

- Ruukki LT100-600S (Ostrava/Żyrardów),
- Ruukki LT125-600S (Ostrava/Żyrardów),
- Ruukki LT150-600S (Ostrava/Żyrardów),
- Ruukki LT200-600S (Ostrava/Żyrardów),
- Ruukki LT100-600SB (Biatorbagy),
- Ruukki LT125-600SB (Biatorbagy),
- Ruukki LT150-600SB (Biatorbagy).

- **Applications**

Ruukki's liner trays are characterized by high quality and durability. Diversified depth and load bearing capacity allow to use liner trays as load bearing elements of sandwich walls. Ruukki's liner trays are applied as internal elements of sandwich walls with thermal insulation. Horizontal positioning and fastening directly to columns increases stability of the structure and eliminates the need of secondary structure – spandrel beams.

Internal side of wall made of liner trays does not require any additional finishing works, thanks to application of the color organic coating. External side of partition made of liner trays can be finished with the use of such Ruukki products as: trapezoidal and wavy facade profiles, Design profiles, cladding lamellas or rain screen panels.

- **Production technology**

Ruukki Polska as a unit of Finnish steel corporation guarantees repeatability of technical parameters on every stage of production, providing end-users opportunities to manufacture goods of the highest quality. Such effect is possible due to integrated technology, beginning from iron making and ending on purifying and treatment processes, with quality control system on each production stage.

- **Production process of hot-dip galvanized steel sheet**

Steel as a base material for production of steel sheets is produced at Raahe steelworks, part of Ruukki corporation. Steel is cut into thick slabs, which are then hot-rolled into steel plates or strips. Hot-rolled strip is delivered in coils for further processing to Hämeenlinna plant, where it is cold-rolled and hot-dip galvanized on zinc coating line. After hot-dip galvanizing the strips are coated with paint coating on coil coating line.

Ruukki's liner trays – Ostrava/Żyrardów*

L.p.	Profile	Thickness [mm]	Depth [mm]	Height [mm]	Steel grade	Coatings metallic	Coatings organic	Length [mm] min.	Length [mm] max.
1.	Ruukki LT100-600S	0.75 0.88 1.00 1.25 1.50	100	600	S320GD+Z	Z 100 Z 275	SP15 SP25	600	12000
2.	Ruukki LT125-600S	0.75 0.88 1.00 1.25 1.50	125	600	S320GD+Z	Z 100 Z 275	SP15 SP25	600	12000
3.	Ruukki LT150-600S	0.75 0.88 1.00 1.25 1.50	150	600	S320GD+Z	Z 100 Z 275	SP15 SP25	600	12000
4.	Ruukki LT200-600S	0.75 0.88 1.00 1.25 1.50	200	600	S320GD+Z	Z 100 Z 275	SP15 SP25	600	12000

** the offer includes starting liner trays with 100, 125, 150, 200 mm*

Ruukki's liner trays – Biatorbagy*

L.p.	Profile	Thickness [mm]	Depth [mm]	Height [mm]	Steel grade	Coatings metallic	Coatings organic	Length [mm] min.	Length [mm] max.
1.	Ruukki LT100-600SB	0.75 0.88 1.00	100	600	S320GD+Z	Z 100	SP15	600	12000
2.	Ruukki LT125-600SB	0.75 0.88 1.00	125	600	S320GD+Z	Z 100	SP15	600	12000
3.	Ruukki LT150-600SB	0.75 0.88 1.00	150	600	S320GD+Z	Z 100	SP15	600	12000

** the offer includes starting liner trays with 100, 125, 150 mm*

- **Layers of coated steel sheet**
  Coated steel sheet consists of many different layers, each of them being important in ensuring optimal use and long-term product durability. The core is a steel sheet, hot-dip galvanized on both sides. Passivating layer on surface of galvanized sheet is applied for improvement of sheet's corrosion resistance. It also serves as a reactive coating under the primer. Prime coat paints contain active anticorrosive pigments, increasing thus corrosion resistance of each sheet. Organic coating gives the final product required appearance and protects against weather conditions. The bottom protective layer guarantees durability of sheet backside.

  Excellent corrosion resistance of hot-dip galvanized steel sheet is based on the combined action of zinc layer and organic coating: together they protect steel sheet considerably better than in case of coating the sheet with one of these layers only. Organic coating does not allow for getting moisture and atmospheric pollutions to zinc layer and improves sheet protection by zinc coating.

  On the other hand, zinc layer slows down corrosion of steel sheet in places where paint coating can be damaged, preventing from further sheet destruction. Using this technology Ruukki guarantees that our steel as raw material meets all material requirements for roofing products and claddings, such as:
  - very good mechanical properties,
  - resistance to UV radiance,
  - resistance to corrosion,
  - resistance to weather conditions.

- **Organic coatings**
  Production scope of Ruukki liner trays includes organic coating SP 15 µm and SP 25 µm in standard colors RAL 9002, RAL 9010.

  Polyester standard: thickness 15 µm (SP 15), for internal use only – inner sides of walls.

  Polyester standard: thickness 25 µm (SP 25), for both internal and external application.

- **Corrosion resistance**
  Ruukki's liner trays should be applied in accordance with technical designs taking into account all valid standards, technical and building regulations and installation guidelines.

  In respect of protection against corrosion liner trays may be used in the following environments:
  - steel sheets with zinc coating of 100 and 275 g/m^2 and with polyester coating SP 15, thickness 15 µm – inside buildings in environments with corrosivity category C1 and C2 according to PN-EN ISO 12944-2 standard,
  - steel sheets with zinc coating of 275 g/m^2 and with polyester coating SP 25, thickness 25 µm – internal and outdoor applications in environments with corrosivity category C1, C2 and C3 according to PN-EN ISO 12944-2 standard.

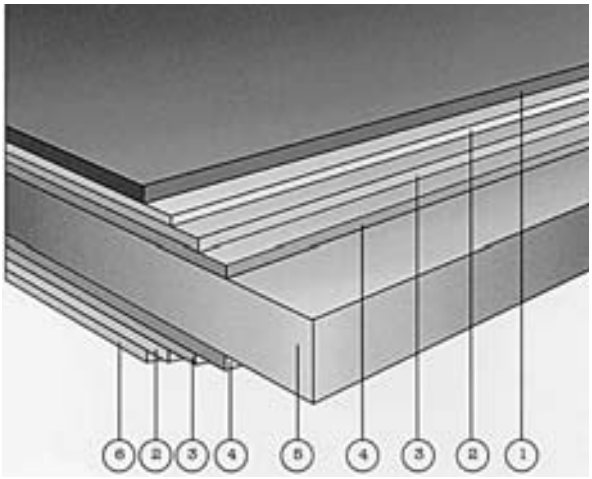

1. Organic coating.
2. Primer.
3. Passivating coating (reactive).
4. Zinc layer.
5. Steel core.
6. Bottom protective layer.

- **Corrosivity categories and examples of typical environments in accordance with PN-EN ISO 12944-2 standard**

  Corrosivity category C1:
  - interior – heated building with clean atmospheres, e.g. offices, shops, schools, hotels.

  Corrosivity category C2:
  - exterior – atmospheres with low level of pollution, mostly rural areas.
  - interior – unheated buildings where condensation may occur, e.g. depots, sports halls.

  Corrosivity category C3:
  - exterior – urban and industrial atmospheres, moderate sulfur dioxide (IV) pollution, coastal areas with low salinity.
  - interior – production rooms with high humidity and some air pollution, e.g. food-processing plants, laundries, breweries, dairies.

- **Fire resistance of buildings**
  Building elements, such as walls made of Ruukki's liner trays used as curtain walls, with respect to fire resistance class of the building, should meet fire resistance and fire spreading requirements set forth in the Regulation of Infrastructure Minister of 12th April 2002 on technical conditions applied to buildings and their locations (Journal of Laws, No. 75, item 690, year 2002, with further amendments).

  Pursuant to art. 216 and art. 272 in respect of fire security internal and external building walls are subject to applicable classifications referring to:
  • fire resistance,
  • fire spreading level.

- **Fire resistance classification of wall systems made of Ruukki's liner trays with rock mineral wool insulation and external steel sheet cladding**
  Based on PN-B-02851-1, PN-EN 1363-1, PN-EN 13501-2 standards and the research reports Fire Research Department of Building Research Technology Institute in Warsaw issued the following classifications referring to:
  - fire resistance of wall system made of Ruukki's liner tray with Isover mineral wool insulation (minimum thickness 100 mm, minimum density 35 kg/m^3) and external cladding made of steel sheet,
  - fire resistance of wall system made of Ruukki's liner tray with Isover mineral wool insulation (minimum thickness 100 mm, minimum density 50 kg/m^3 + minimum thickness 40 mm, minimum density 80 kg/m^3) and external cladding made of steel sheet,
  - fire resistance of wall system made of Ruukki's liner tray with Rockwool mineral wool insulation (minimum thickness 140 mm, minimum density 55 kg/m^3) and external cladding made of steel sheet.

- **Technical description – data applicable to all systems**
  The described systems are applicable to any type of support (wood, steel, concrete, reinforced concrete) with maximum span of 700 cm.

  No loading elements such as various media systems, ventilation ducts, etc. can be suspended from walls.

  Liner trays are fastened to:
  - reinforced concrete columns, filled block walls or concrete walls, with the use of steel fasteners minimum 4,5x55 mm or pyrotechnically set nails with minimal diameter of 3,7 mm – one fastener/nail in each wave's pit, i.e. 3 pieces on one side of liner tray,
  - steel columns, with the use of steel screws minimum 4,5x25 mm or pyrotechnically set nails with minimal diameter of 3,7 mm – one screw/nail in each wave's pit, i.e. 3 pieces on one side of liner tray,
  - wooden columns, with the use of steel screws minimum 5,5x55 mm – one screw in each wave's pit, i.e. 3 pieces on one side of liner tray.

  Maximum axial span of supports/columns (liner tray span) – 700 cm. The height of the wall has no limitations.
  Liner trays are joined with each other by self-drilling screws minimum 4,8x19 mm, screwed in staggered arrangement in maximal distances of 300 mm.

  The following elements can be used as external claddings: facade profiled sheets of T- and S-type; facade cassettes and facade panels installed vertically or horizontally according to table 1 in fire resistance classification, made of steel sheet DX51D, S280GD, S320GD or S350GD with zinc layer Z275 and Z350 or aluminium-zinc layer AZ150 or AZ185 in accordance with PN-EN 10326 and PN-EN 10327 standards.

  These elements can be additionally protected on the face side by polyester coating SP25 or SP35, PVDF coating with thickness up to 60 µm, Pural or Pural matt coating with thickness of 50 µm, Galea coating with thickness of 50 µm, Shine coating with thickness of 37 µm or by powder painting (thickness of paint coating up to 200 µm); thickness of galvanized steel sheet is 0.50-1.5 mm.

- **Fire resistance classification of wall system made of Ruukki's liner trays with Isover mineral wool insulation (minimum thickness 100 mm, minimum density 35 kg/m³) and external cladding made of steel sheet**

EI 30 – according to PN-B-02851-1 standard; provided that a load bearing structure of minimum R 30 fire resistance at fire spreading from inside is used.

EI 30 (i→o) – according to PN-EN 13501-2 standard; provided that a load bearing structure of minimum R 30 fire resistance at fire spreading from inside is used.

EW 30 (i→o) – according to PN-EN 13501-2 standard; provided that a load bearing structure of minimum R 30 fire resistance at fire spreading from inside is used.

Horizontal section

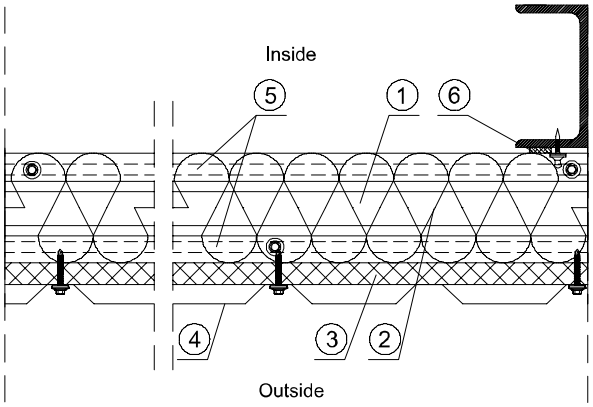

- **System of layers**

1. Ruukki's liner tray.
2. Isover mineral wool, min. density 35 kg/m³, thickness 100 mm (Polterm Uni).
3. Insulation block, thickness 19 mm.
4. Ruukki's facade profile.
5. Self-adhesive sealing tape PES 3x10 mm.
6. Self-adhesive sealing tape PUS 15x20 mm.

- **Technical description**

Facade elements in vertical arrangement are fastened with self-drilling screws minimum 4.8x35 mm to liner tray's ribs, at maximum in every second wave's pit (recommended screw span should not exceed 300 mm). Facade elements in horizontal system are fastened with self-drilling screws 4.8x16 mm to installation profiles – steel framework (screw span depends on profile span). Installation profiles – steel framework are fastened with self-drilling screws minimum 4.8x35 mm to each liner tray's rib.

Liner trays are sealed with self-adhesive sealing tapes PES minimum 3x10 mm and with self-adhesive sealing tapes PUS minimum 15x20 mm in points of fastening to structural elements of the building and between two adjacent liner trays. Bottom horizontal edge is sealed with polyurethane seal, minimum thickness 10 mm (recommended 20 mm). Insulation blocks with thickness of 19 mm should be used on ribs as separators. Panels made of Isover mineral rock wool used for filling liner trays should have minimum density 35 kg/m³ and thickness corresponding to the depth of liner tray (minimum 100 mm).

Vertical section

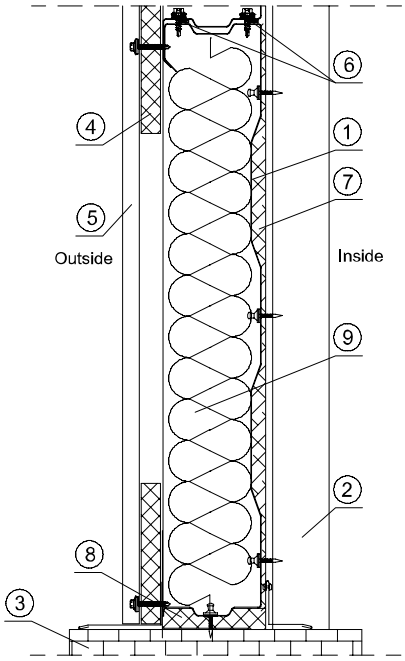

1. Ruukki's liner tray.
2. Support/column.
3. Foundation.
4. Insulation block, thickness 19 mm.
5. Ruukki's facade profile.
6. Self-adhesive sealing tape PES 3x10 mm.
7. Self-adhesive sealing tape PUS 15x20 mm.
8. Polyurethane seal, thickness 20 mm.
9. Isover mineral wool, min. density 35 kg/m³, thickness 100 mm (Polterm Uni).

- **Fire resistance classification of wall system made of Ruukki's liner trays with Isover mineral wool insulation (minimum thickness 100 mm, minimum density 50 kg/m³ + minimum thickness 40 mm, minimum density 80 kg/m³) and external cladding made of steel sheet**

  EI 60 – according to PN-B-02851-1 standard; provided that a load bearing structure of minimum R 60 fire resistance at fire spreading from inside is used.

  EI 60 (i→o) – according to PN-EN 13501-2 standard; provided that a load bearing structure of minimum R 60 fire resistance at fire spreading from inside is used.

  EW 180 (i→o) – according to PN-EN 13501-2 standard; provided that a load bearing structure of minimum R 180 fire resistance at fire spreading from inside is used.

- **System of layers**
  1. Ruukki's liner tray.
  2. Isover mineral wool, minimum density 50 kg/m³, thickness 100 mm (Polterm Max).
  3. Isover mineral wool, minimum density 80 kg/m³, thickness 40 mm (PT 80).
  4. Ruukki's facade profile.
  5. Self-adhesive sealing tape PES 3x10 mm.
  6. Self-adhesive sealing tape PUS 15x20 mm.

Horizontal section

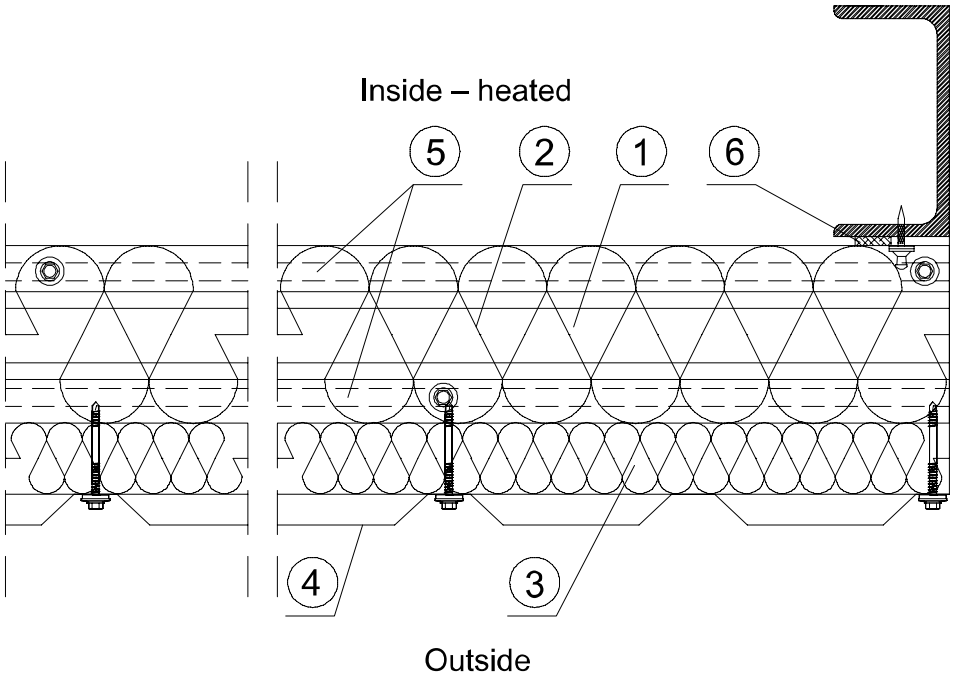

Technical description

Facade elements in vertical arrangement are fastened with self-drilling screws minimum 4.8x50 mm to liner tray's ribs, at maximum in every second wave's pit (recommended screw span should not exceed 300 mm). Facade elements in horizontal arrangement are fastened with self-drilling screws 4.8 x 16 mm to installation profiles – steel framework (screw span depends on profile span). Installation profiles – steel framework are fastened with self-drilling screws minimum 4.8x50 mm to each liner tray's rib.

Liner trays are sealed with self-adhesive sealing tapes PES minimum 3x10 mm and with self-adhesive sealing tapes PUS minimum 15x20 mm in points of fastening to structural elements of the building and between two adjacent liner trays. Bottom horizontal edge is sealed with polyurethane seal, minimum thickness 10 mm (recommended 20 mm).

Panels made of Isover mineral wool used for filling liner trays, minimum density 50 kg/m^3 and thickness corresponding to the depth of liner tray (minimum 100 mm) and panels made of Isover mineral wool fastened to liner tray's ribs, minimum density 80 kg/m^3 and minimum thickness 40 mm.

Vertical section

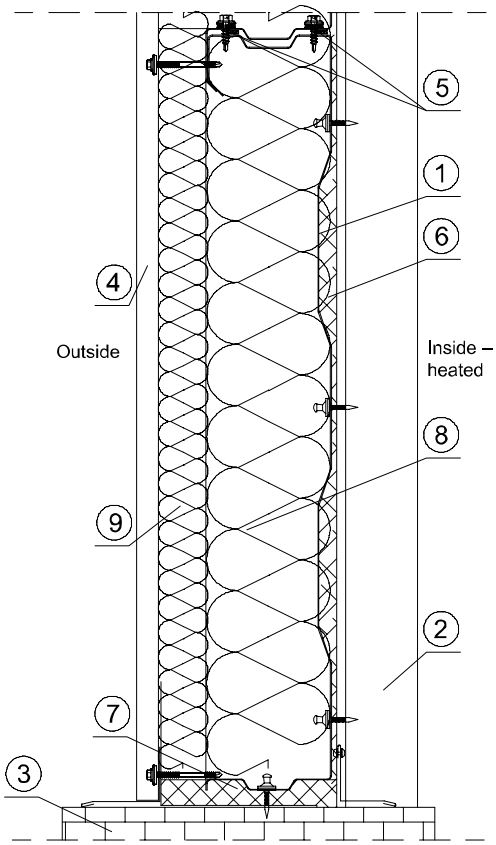

1. Ruukki's liner tray.
2. Support/column.
3. Foundation.
4. Ruukki's facade profile.
5. Self-adhesive sealing tape PES 3x10 mm.
6. Self-adhesive sealing tape PUS 15x20 mm.
7. Polyurethane seal, thickness 20 mm.
8. Isover mineral wool, min. density 50 kg/m^3, thickness 100 mm (Polterm Max).
9. Isover mineral wool, min. density 80 kg/m^3, thickness 40 mm (PT 80).

- **Fire resistance classification of wall system made of Ruukki's liner trays with Rockwool mineral wool insulation (minimum thickness 140 mm, minimum density 55 kg/m³) and external cladding made of steel sheet**

  EI 60 – according to PN-B-02851-1 standard; provided that a load bearing structure of minimum R 60 fire resistance at fire spreading from inside is used.

  EI 60 (i→o) – according to PN-EN 13501-2 standard; provided that a load bearing structure of minimum R 60 fire resistance at fire spreading from inside is used.

  EW 180 (i→o) – according to PN-EN 13501-2 standard; provided that a load bearing structure of minimum R 180 fire resistance at fire spreading from inside is used.

- **Technical description**
  Facade elements in vertical arrangement are fastened with self-drilling screws minimum 4.8x50 mm to liner tray's ribs, at maximum in every second wave's pit (recommended screw span should not exceed 300 mm). SDC2-A16-5,5x63 screws of SFS Intec company are recommended for fastening of trapezoidal profiled sheets. Facade elements in horizontal arrangement are fastened with self-drilling screws 4.8x16 mm to installation profiles – steel framework (screw span depends on profile span). Installation profiles – steel framework are fastened with self-drilling screws minimum 4.8x50 mm to each liner tray's rib.

Horizontal section

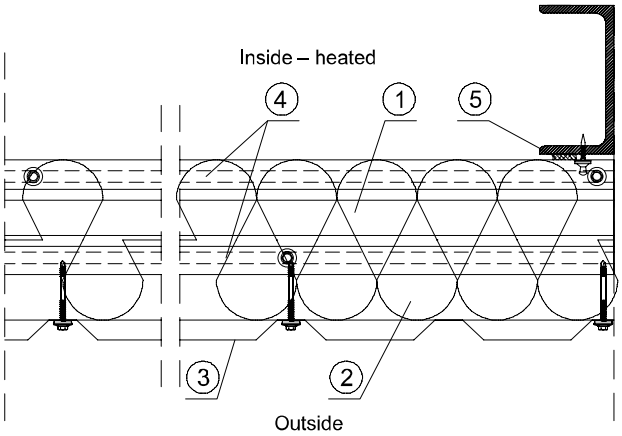

Vertical section

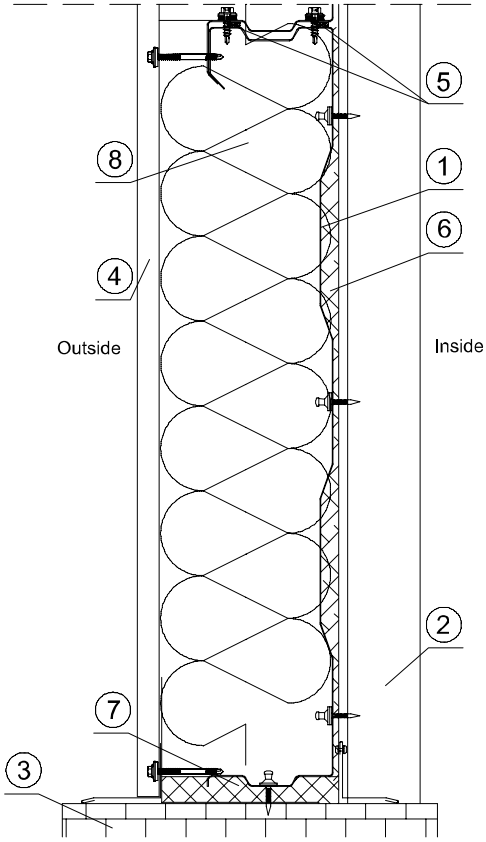

- **System of layers**
  1. Ruukki's liner tray.
  2. Rockwool mineral wool, minimum density 55 kg/m³, thickness 140 mm (Stalrock Max).
  3. Ruukki's facade profile.
  4. Self-adhesive sealing tape PES 3x10 mm.
  5. Self-adhesive sealing tape PUS 15x20 mm.

1. Ruukki's liner tray.
2. Support/column.
3. Foundation.
4. Ruukki's facade profile.
5. Self-adhesive sealing tape PES 3x10 mm.
6. Self-adhesive sealing tape PUS 15x20 mm.
7. Polyurethane seal, thickness 20 mm.
8. Rockwool mineral wool, min. density 55 kg/m³, thickness 140 mm (Stalrock Max).

Liner trays are sealed with self-adhesive sealing tapes PES minimum 3x10 mm and with self-adhesive sealing tapes PUS minimum 15x20 mm in points of fastening to structural elements of the building nad between adjacent liner trays. It is recommended to use seals made of polyurethane foam manufactured by SFS Intec: LD-10/1-4 (in points where the liner trays are joined) and LD-14/3-9 in points of fastening to structural elements. Bottom horizontal edge is sealed with polyurethane seal, minimum thickness 10 mm (recommended 20 mm). Panels made of Rockwool mineral rock wool (Stalrock Max), minimum density 55 kg/m^3 and minimum thickness 140 mm.

- **Notes to fire resistance classification**

E 30 classification means that fire-tightness criterion of curtain wall made of Ruukki's liner tray system is maintained for minimum 30 minutes.

E 60 classification means that fire-tightness criterion of curtain wall made of Ruukki's liner tray system is maintained for minimum 60 minutes.

E 180 classification means that fire-tightness criterion of curtain wall made of Ruukki's liner tray system is maintained for minimum 180 minutes.

EI 30 classification means that fire-tightness and fire-insulation criterion of curtain wall made of Ruukki's liner tray system is maintained for minimum 30 minutes.

EI 60 classification means that fire-tightness and fire-insulation criterion of curtain wall made of Ruukki's liner tray system is maintained for minimum 60 minutes.

W 180 classification means that on the unheated side of curtain wall made of Ruukki's liner tray system heat radiation intensity did not exceed 15 kW/m2 within 180 minutes.

Fire resistance of load bearing structure for the curtain wall, made of Ruukki's liner tray system fulfilling E 30 tightness criteria or EI 30 tightness and insulation criteria, should meet the requirements of R 30 fire classification.

Fire resistance of load bearing structure for the curtain wall, made of Ruukki's liner tray system fulfilling E 60 tightness criteria or EI 60 tightness and insulation criteria, should meet the requirements of R 60 fire classification.

Fire resistance of load bearing structure for the curtain wall, made of Ruukki's liner tray system fulfilling E 180 and W 180 tightness criteria, should meet the requirements of R 180 fire classification.

- **Application of wall system in buildings**

The above tables indicate that:

- curtain walls made of Ruukki's liner tray system, with fire resistance EI 30 according to art. 216, art. 272 of the said regulation, meet the requirements for external walls in buildings of 'C", "D", "E" fire resistance class (excluding inter-floor zone),
- curtain walls made of Ruukki's liner tray system, with fire resistance EI 60 according to art. 216, art.272 of the said regulation, meet the requirements for external walls in buildings of "B", "C", "D", "E" fire resistance class (excluding inter-floor zone).

Acoustic insulation

Acoustic insulation corresponding to PN-EN 20140-3 standard: laboratory measurements of elements' insulation against air sounds made for systems 1, 2, 3 and 4.

Sound absorption in echo room according to PN-EN ISO 354: sound absorption coefficient measured for system 4.

System No. 1
Indexes according to PN-EN ISO 717-1
Rw(C;Ctr)=44 (-4; -11) dB

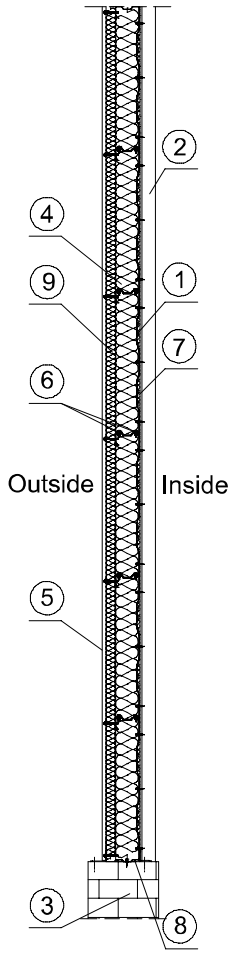

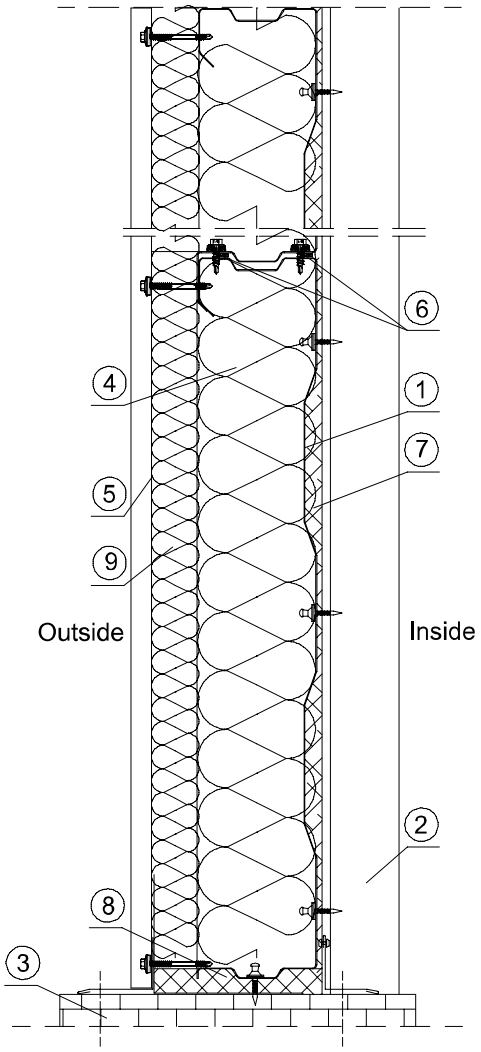

1. Liner tray LT100-600S.
2. Hot-rolled angle L65x65x7.
3. Foundation.
4. Isover mineral rock wool, min. density 50 kg/m^3, thickness 100 mm.
5. Ruukki's trapezoidal steel sheet.
6. Self-adhesive sealing tape PES 3x10 mm.
7. Self-adhesive sealing tape PUS 15x20 mm.
8. Impregnated polyurethane seal, thickness 20 mm.
9. Isover mineral rock wool, min. density 80 kg/m^3 and min. thickness 40 mm.

- **System No. 2**

Indexes according to PN-EN ISO 717-1
Rw(C;Ctr)=42 (-3; -10) dB

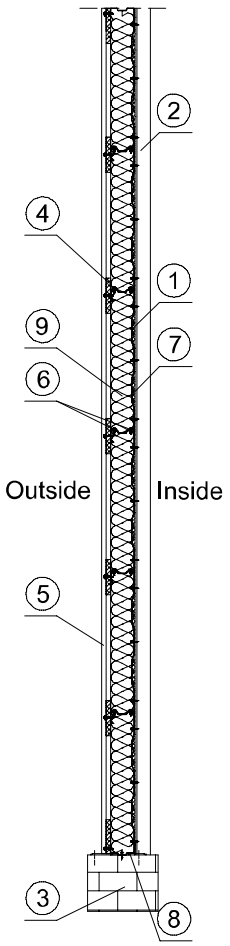

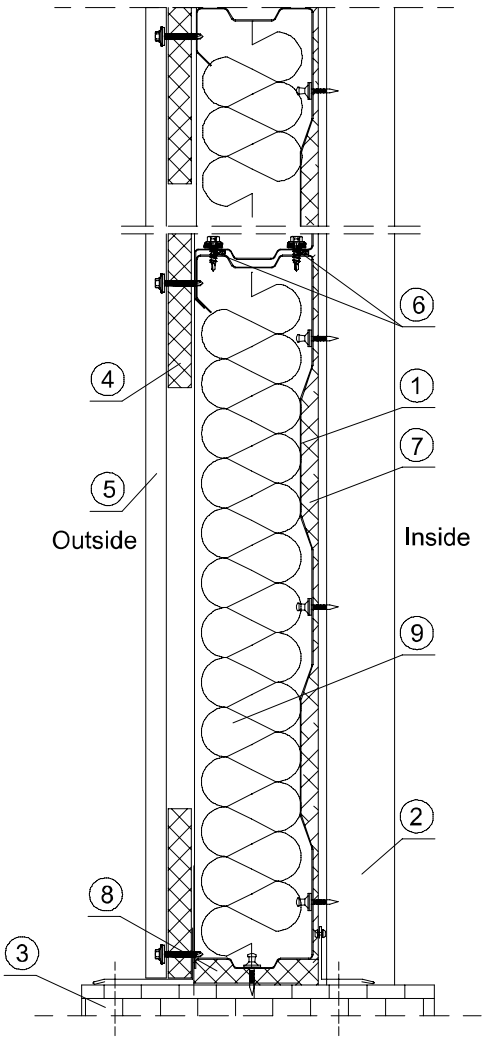

1. Liner tray LT100-600S.
2. Hot-rolled angle.
3. Foundation.
4. Insulation block hxt=100x19 mm.
5. Ruukki's trapezoidal steel sheet.
6. Self-adhesive sealing tape PES 3x10 mm.
7. Self-adhesive sealing tape PUS 15x20 mm.
8. Impregnated polyurethane seal, thickness 20 mm.
9. Isover mineral wool, thickness 100 mm (Polterm Uni).

- **System No. 3**

Indexes according to PN-EN ISO 717-1
Rw(C;Ctr)=42 (-3; -10) dB

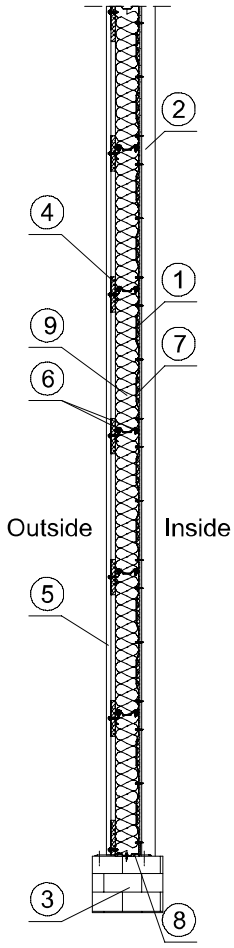

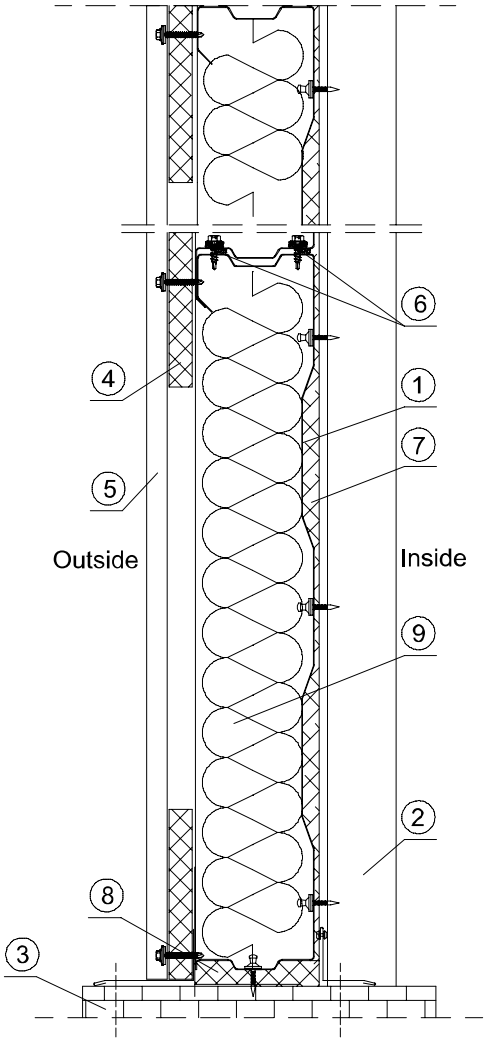

1. Liner tray LT100-600S.
2. Hot-rolled angle.
3. Foundation.
4. Insulation block hxt=100x19 mm.
5. Ruukki's trapezoidal steel sheet.
6. Self-adhesive sealing tape PES 3x10 mm .
7. Self-adhesive sealing tape PUS 15x20 mm.
8. Impregnated polyurethane seal, thickness 20 mm.
9. Isover glass wool, thickness 100 mm (Aku-Płyta).

- **System No. 4**

Indexes according to PN-EN ISO 717-1
Rw(C;Ctr)=33 (-2; -7) dB

Indexes according to PN-EN ISO 11654
α_w=0,90(L)
Absorption class: **A**

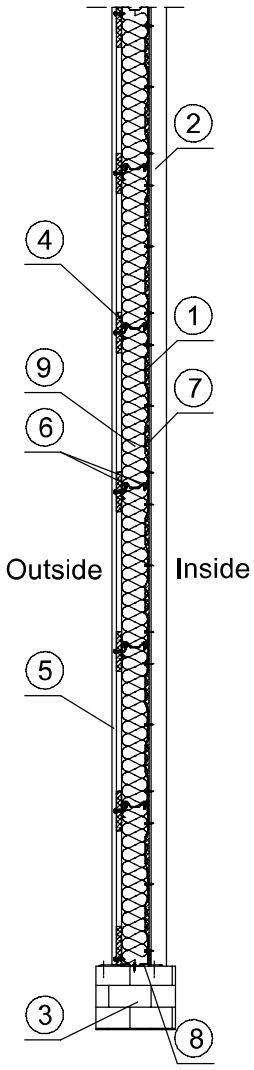

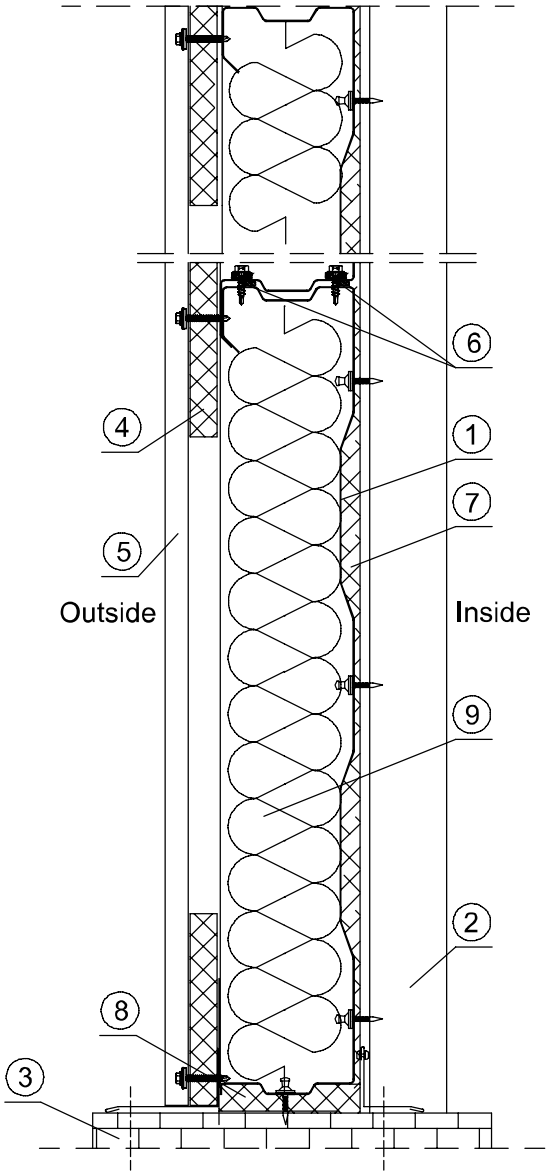

1. Liner tray LT100-600S (perforated).
2. Hot-rolled angle.
3. Foundation.
4. Insulation block hxt=100x19 mm.
5. Ruukki's trapezoidal steel sheet.
6. Self-adhesive sealing tape PES 3x10 mm.
7. Self-adhesive sealing tape PUS 15x20 mm.
8. Impregnated polyurethane seal, thickness 20 mm.
9. Isover glass wool, thickness 100 mm (Super-Mata).

Thermal insulation

The table provides coefficient of overall heat-transfer through partitions built of Ruukki's liner trays filled with Isover mineral wool for three alternatives of Structure I (model I) and one alternative of Structure II (model II). These coefficients include line and point bridges U_c[W/(m^{2}K)]. U_c values come from 3-dimensional calculations.

In Structure I, figure 1, three types of material fillings were used. Material 9 in figure 1 in further solutions has a different value of thermal conductivity.

Material 9 refers to the following brands:
- alternative 1) Isover Aku-Płyta,
- alternative 2) Isover Polterm Uni,
- alternative 3) Isover Super-Mata.

Structure II, figure 2, has only one alternative.
Isover Polterm Max is used as filling number 4,
Isover PT 80 is used as filling number 9.

U_c [W/(m^2·K)] values for wall structures

No.	*Structure identification*	*Depth of liner tray (mm)*			
		100	*125*	*150*	*200*
1.	Structure I, alternative 1	0.50	0.43	0.39	0.33
2.	Structure I, alternative 2	0.52	0.45	0.41	0.34
3.	Structure I, alternative 3	0.47	0.41	0.37	0.31
4.	Structure II	0.33	0.30	0.28	0.24

Structure I

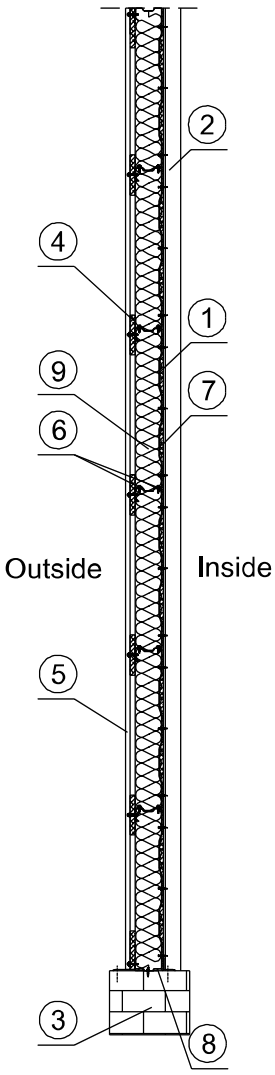

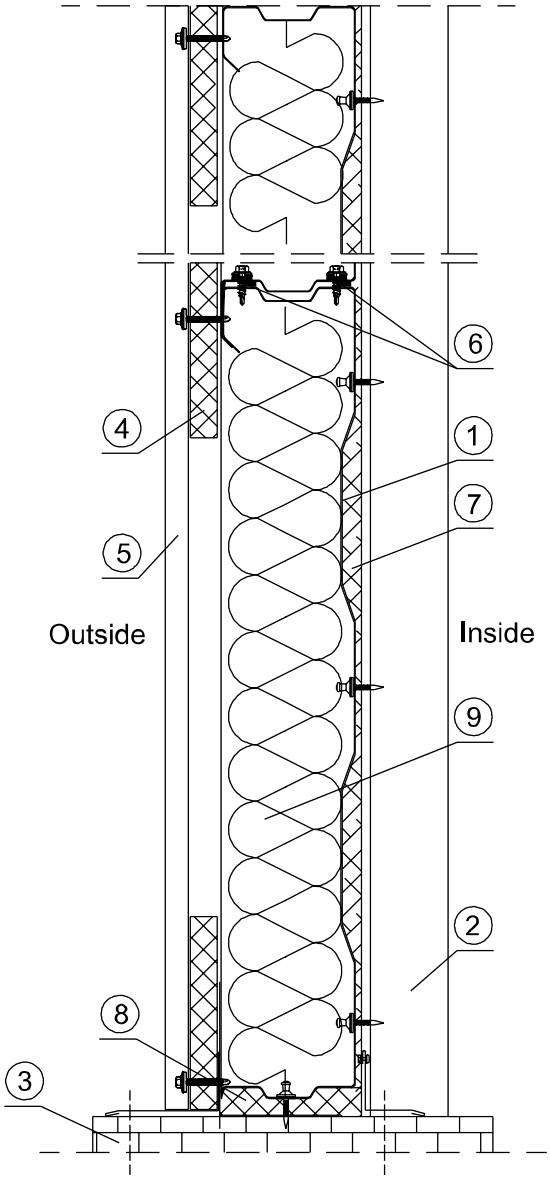

1. Liner tray LT100-600S.
2. Hot-rolled angle.
3. Foundation.
4. Insulation block hxt=100x19 mm.
5. Ruukki's trapezoidal steel sheet.
6. Self-adhesive sealing tape PES 3x10 mm.
7. Self-adhesive sealing tape PUS 15x20 mm.
8. Impregnated polyurethane seal, thickness 20 mm.
9. Isover wool filling (see: page 17).

Structure II

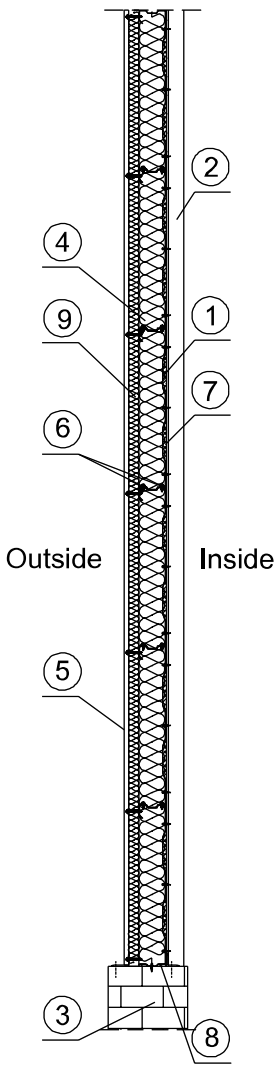

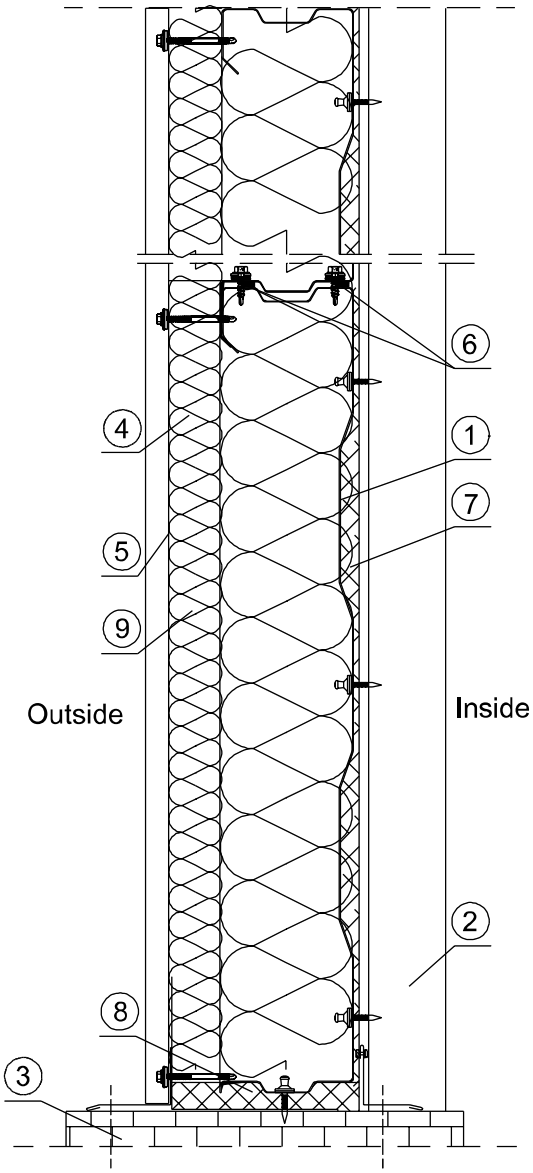

1. Liner tray LT100-600S.
2. Hot-rolled angle.
3. Foundation.
4. Isover mineral rock wool, min. density 50 kg/m^3 and thickness 10 mm.
5. Ruukki's trapezoidal steel sheet.
6. Self-adhesive sealing tape PES 3x10 mm.
7. Self-adhesive sealing tape PUS 15x20 mm.
8. Impregnated polyurethane seal, thickness 20 mm.
9. Isover mineral rock wool, min. density 80 kg/m^3 and min. thickness 40 mm.

- **Packaging, transport, unloading**

Packaging:
Packaging method of Ruukki's liner trays aims to eliminate any risk of damage during loading, transport and unloading (figure 1). Ruukki's liner trays are packed in wooden boxes formed directly after production and the box dimensions depend on liner trays' length and depth. Bottom of the box constitutes a wooden pallet, on which first a foil is placed and then liner trays are put alternately.

One liner tray is inserted into another, making 2-piece sets with a polystyrene block between them. 2-liner tray packages are separated with a foam in order to avoid any damage to organic coating.

After placing a sufficient number of liner trays (table 1), they are wrapped with foil and then a box is mounted. Bands made of wooden beams, fastened by a steel tape, are formed. A top beam of the box is thicker than a bottom beam providing thus better security during transport. This solution enables unloading of boxes with the use of fork-lift.

On both edges of the box a wooden frame is reinforced by wooden stiffening. It prevents from uncontrolled deformation of the frame and protects liner trays from sliding out of the box during transport. At the end each package of liner trays is additionally secured by a steel tape along the box.

- **Standard packaging method of liner trays with the same length*** *Tabel 1*

LT100-600S – 20 pieces in the package (height 1000 mm + 200 mm package = 1200 mm
LT125-600S – 16 pieces in the package (height 1000 mm + 200 mm package = 1200 mm
LT150-600S – 14 pieces in the package (height 1050 mm + 200 mm package = 1250 mm
LT200-600S – 10 pieces in the package (height 1000 mm + 200 mm package = 1200 mm

** width of package with liner trays of any depth is around 780-800 mm*

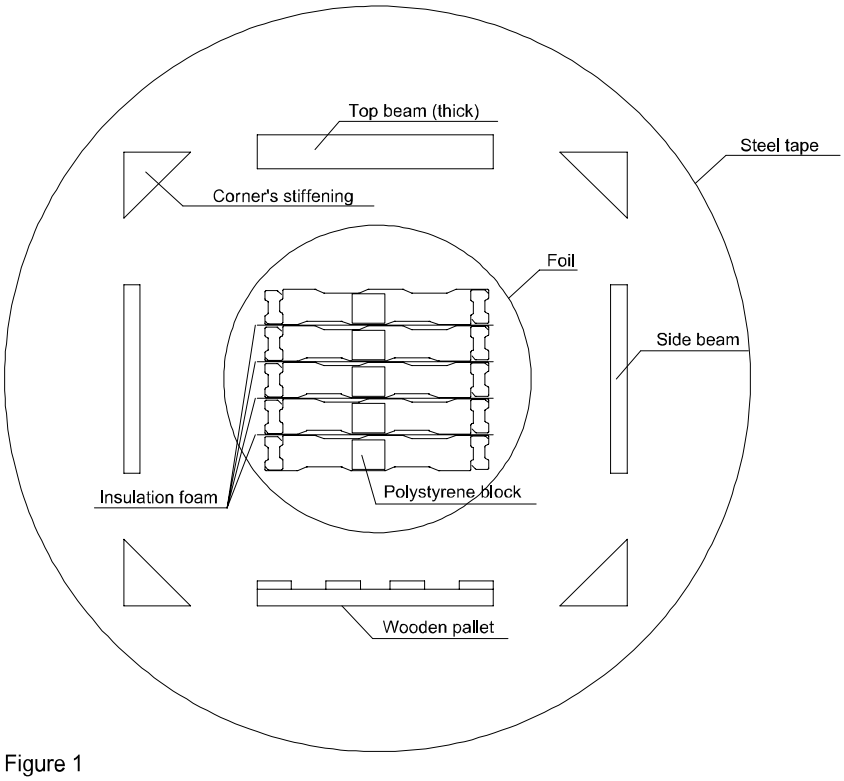

Figure 1

- **Transport**

The packages are loaded maximally in two levels and in three rows. The boxes are placed in the truck on top of each other in such way that bottom beams of the pallet of the upper package do not align with top beams of the package placed below (fig. 2).Staggered arrangement of pins from both packages prevents the boxes from moving during transport (fig. 3).

Pins on the bottom of the box are shorter than pins on the top, which allows them to stagger without any danger of damaging liner trays in the lower box (there is still space between a liner tray and a pin). For additional protection, after the last box is loaded, it is recommended to fasten all packages with straps.

Note: straps must go through the wooden frame of the box! It is not allowed to fasten straps directly on liner trays as it may damage them.

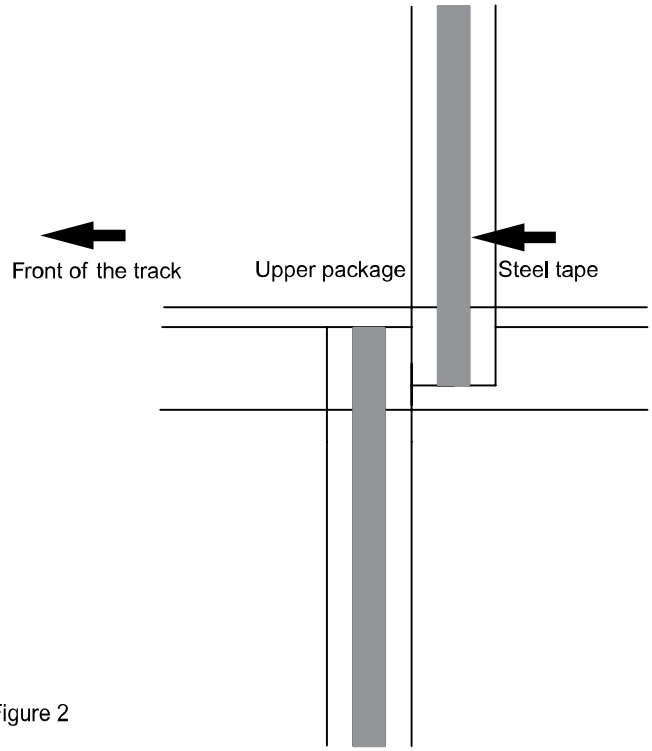

Figure 2

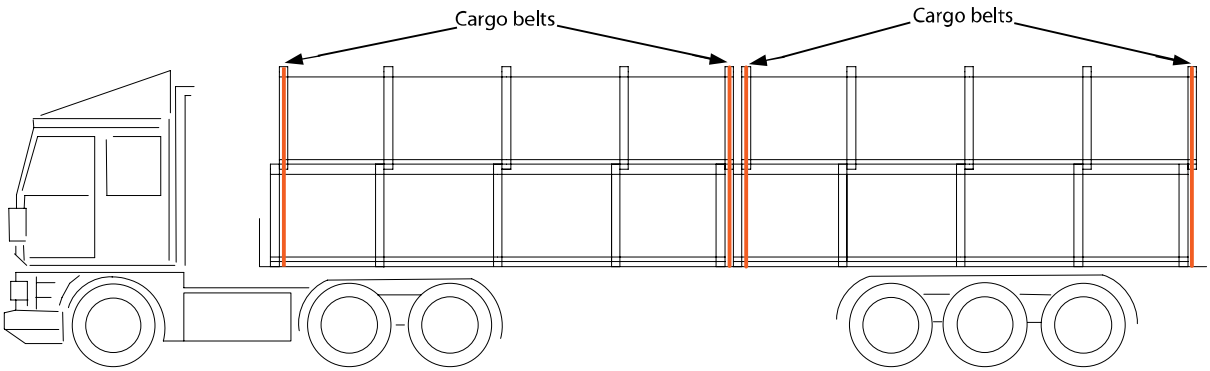

Figure 3

- **Mechanical unloading**

It is recommended to unload the original packages using a crane or a fork-lift whether it is possible. Packages up to 5 m long may be unloaded with the use of fork-lifts with the standard fork span (ca. 1 m). Boxes longer than 5 m must be unloaded with the use of a crane or a fork-lift with wider fork span (ca. 4 m). While using a crane it is necessary to make sure that the lifting slings do not cross. Therefore a cross-bar must be used (fig. 4 and 5). Slings cannot be caught on the crane hook or fork-lift's forks only!

Note: belts must go through the wooden frame of the box! It is not allowed to fasten belts directly on liner trays as it may damage them.

Boxes must be placed on hard surface, with a pallet facing the ground. Packages can be piled in maximum two layers.

Note:

1. Packages must be lifted with the use of a cross-bar and two cargo straps of multiple use – make sure that both a cross-bar and straps have loading applicable to the packages' weight.
2. Each time the condition of cargo straps must be checked before use.
3. Packages should be caught in such way that their center of gravity matches the cross-bar's catch point (fig. 6).
4. While lifted, the belts should be placed perpendicularly to the package (fig. 6).

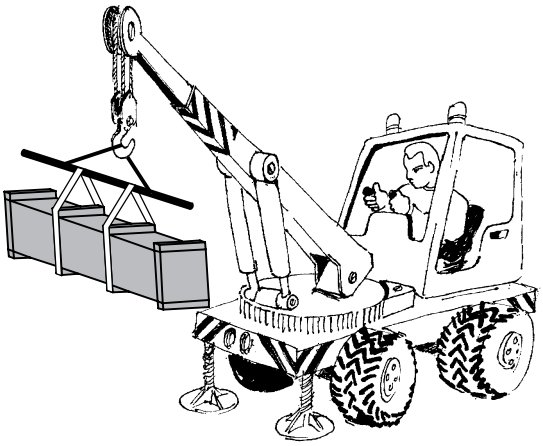

Figure 4

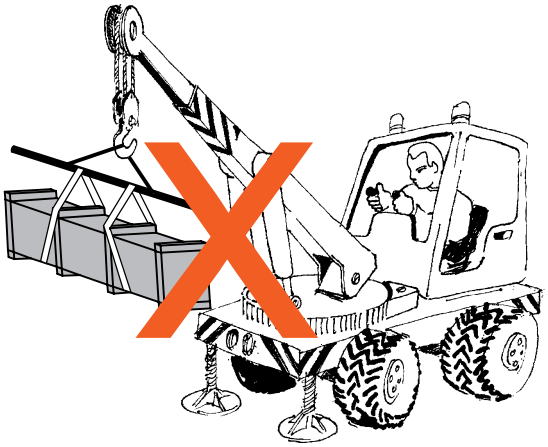

Figure 5

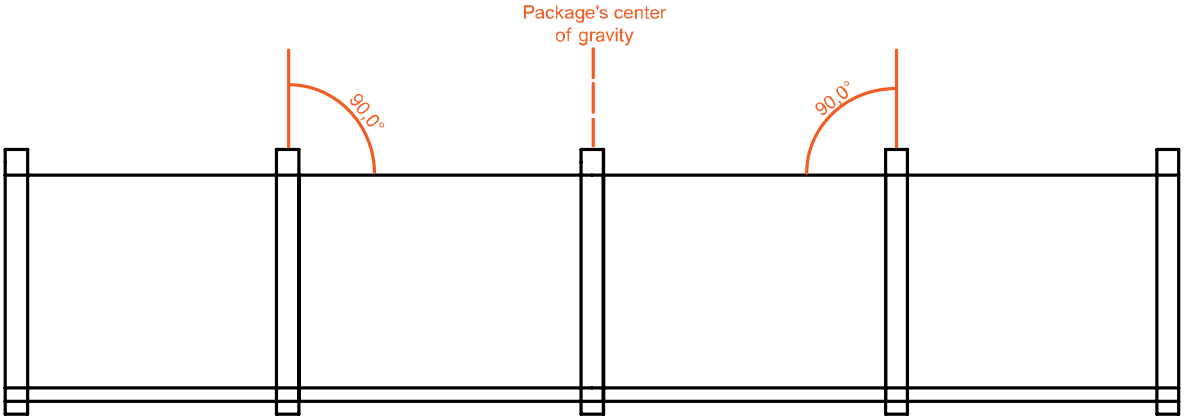

Figure 6

- **Manual unloading**
  In case where mechanical unloading with a crane or a fork-lift is impossible, the packages may be unloaded manually. After unloading, make sure that liner trays are not slided directly one by one (fig. 7). It may damage the organic coating and decrease product's aesthetics.

  Manual unloading should be carried out by the sufficient number of persons, depending on liner trays' length. Unloading of liner trays up to 6 m long may be carried out by 2 persons – one person on each end of the liner tray (fig. 8). If liner trays are longer than 6 meters, then at least 3 persons should unload them. Protective gloves must be used during manual unloading!

- **Storage**
  Unpacked parcels should not be stored longer than 4 weeks following the production date. In case of longer storage it is recommended to place boxes in the way providing water drainage from the package surface. Maximum storage period is 6 months from the production date, but it requires removing the foil from packages and separating liner trays with wooden strips so the air is provided to the top coating of each liner tray.

  Unloaded liner trays cannot be stored in open-air without any protection against weather conditions. They must be sufficiently covered and ventilated.

  Stepping on packages or storing anything on top of them is absolutely forbidden!

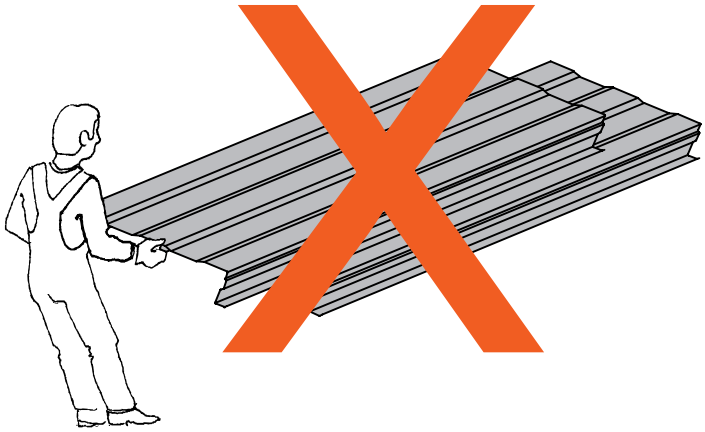

Figure 7

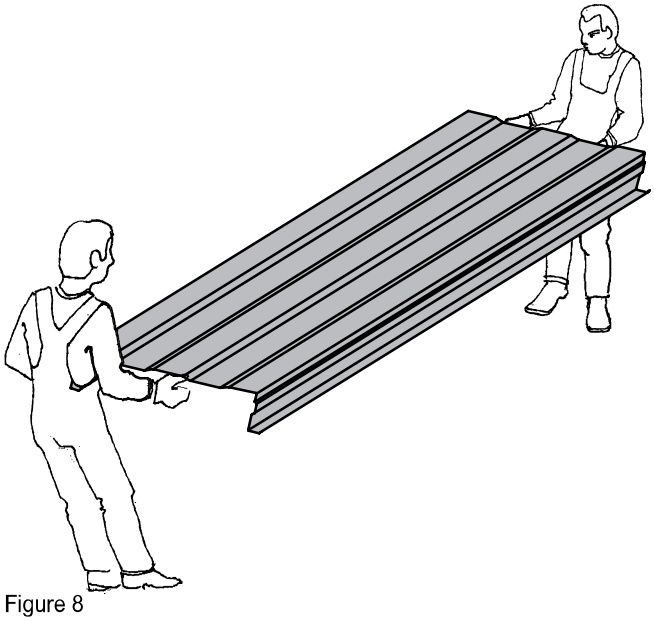

Figure 8

Installation instructions

1. Prepare and clean a ground beam before installation.

2. Unroll impregnated polyurethane seal with thickness of 20 mm and width corresponding to the depth of Ruukki's liner tray.

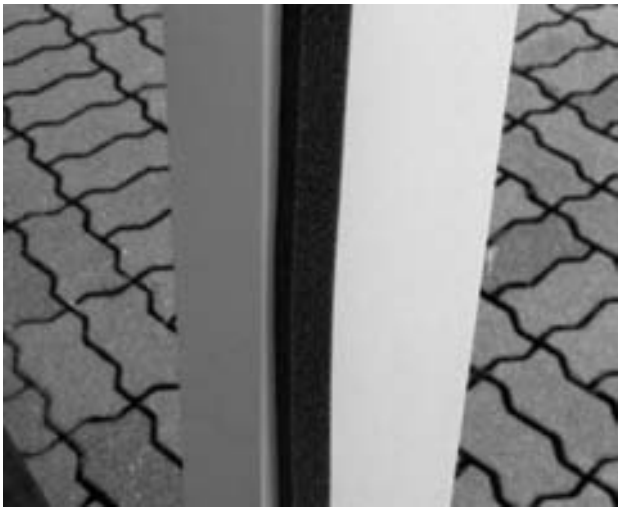

3. Stick self-adhesive sealing tape PUS 15x20 mm to the column along the entire length where Ruukki's liner trays will be installed.

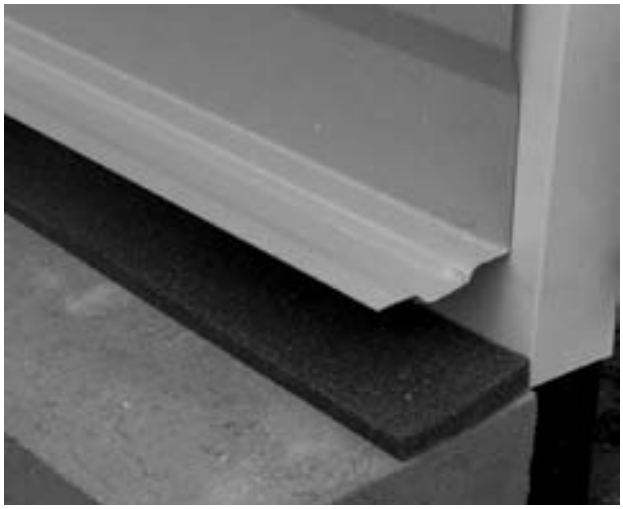

4. Prepare a starting liner tray for installation.

5. A starting liner tray should be leaned on the seal on its entire length and width.

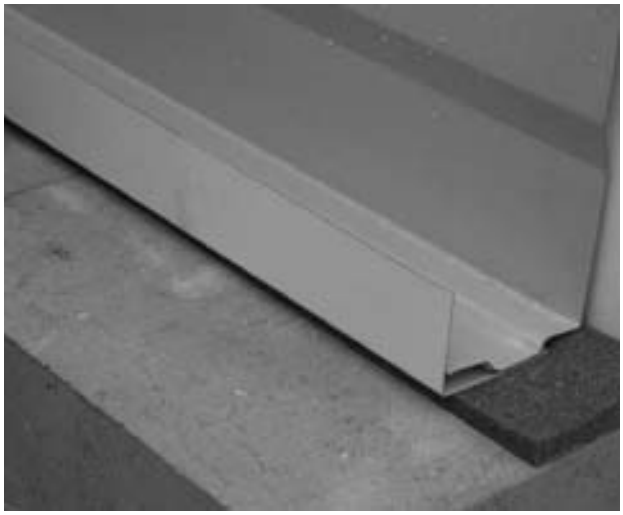

6. Place an angle-shaped flashing between a liner tray and a seal.

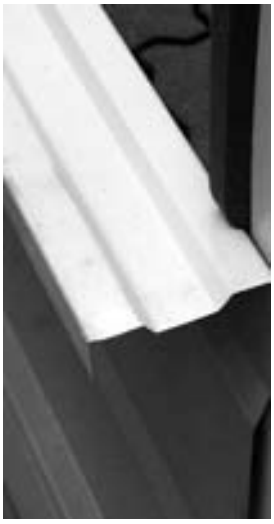

7-8. Position a liner tray in such way that embossing is filled with a seal.

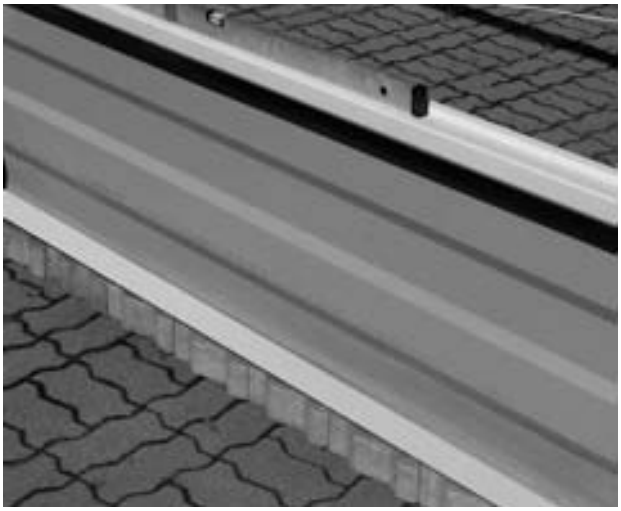

9. Using a level line check if a liner tray is positioned horizontally.

10. Fasten a liner tray to the column with the use of a pyrotechnical shooter and shot nails or with the use of a screw gun and self-drilling screws, depending on the column's material.

11. A liner tray must be fastened to the column in three points on each edge, as shown in the picture.

12. Fasten a starting liner tray to the plinth with the use of shot nails or self-drilling screws.

13. A starting liner tray should be fastened in the middle of flange in 300 m distances.

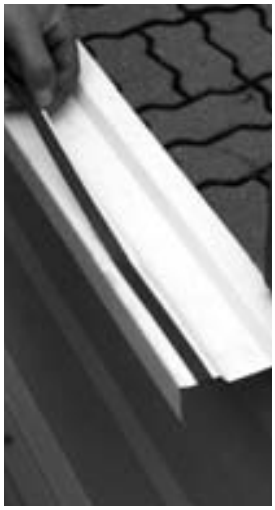

14-15. Place two strips of self-adhesive sealing tape PES 3x10 mm as shown in the left pictures..

16. Position a next liner tray on the fastened one and clamp them with pliers on both ends to ensure better contact.

17. Measure points in maximum distances of 500 mm and mark locations of screws.

18. Using a screw gun fasten liner trays with self-drilling screws.

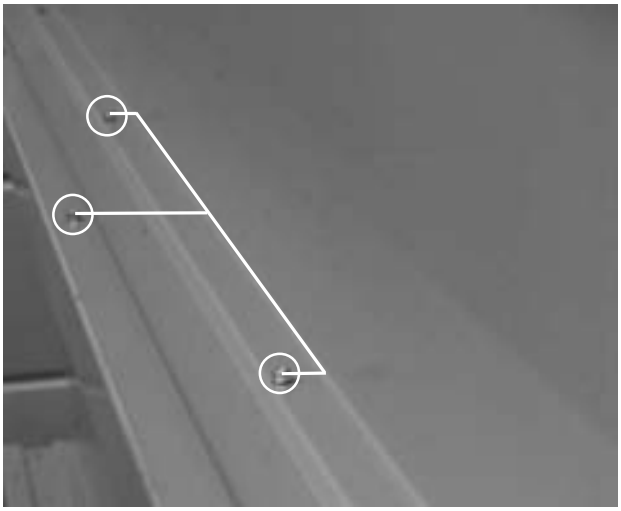

19. Screws should be arranged in staggered order in maximum 500 mm distances.

20-21. Fasten a liner tray to the column in three points on each end of the liner tray, according to p. 10 and 11.

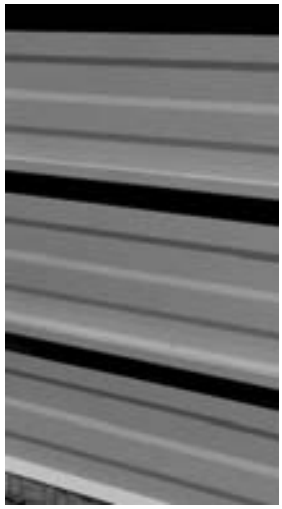

22. Place the seals and continue installation, beginning from point 16.

23. Place thermal insulation inside a liner tray. In the bottom liner tray place insulation in its lowest part first, and then press the upper edge under the liner tray's rib.

24. In liner trays positioned higher, at first place insulation under the liner tray's rib and then press the lower edge of insulation into the liner tray.

25. Press down pieces of thermal insulation making the gap between them as small as possible.

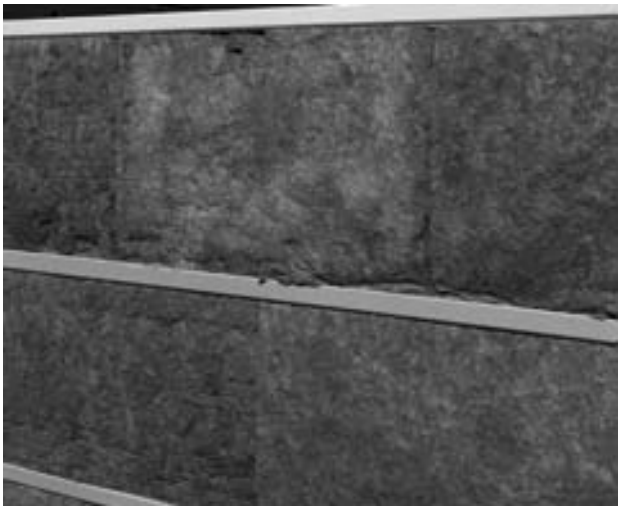

26. Joints of thermal insulation should not be in one line. Staggered arrangement is recommended.

27. Fasten an insulation block hxt=150x19 mm to the liner tray's rib.

28. Pre-fastening of insulation blocks should be done with self-drilling screws with cone heads. It is recommended to use 3 screws to fasten one block.

29. Insulation blocks are installed continuously along entire length of the liner tray.

30. Position a plinth's flashing before installing an external cladding.

31. Position facade steel sheet in the way providing ventilation. It is recommended to leave 5 mm gap between a flashing and a bottom edge of external cladding.

32. Fasten external cladding with one screw to the liner tray's rib in order to enable its vertical positioning.

33. With the use of a string mark the line of screw fastening at the rib's level.

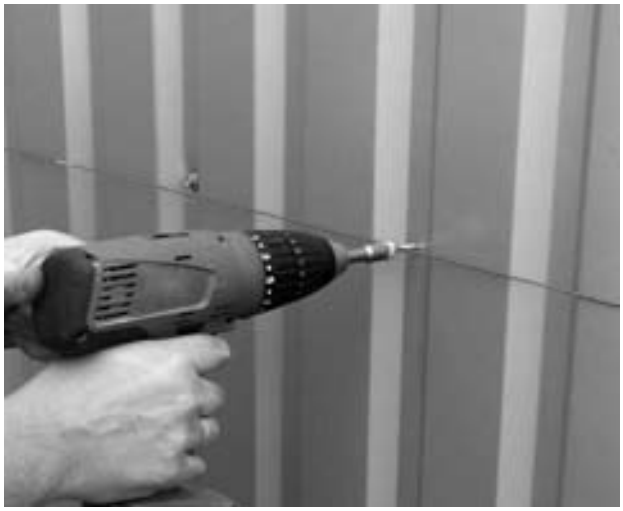

34. Fasten external cladding to the liner tray's rib, applying screws in every second wave of the trapezoidal steel sheet.

35. Then fasten a bottom edge of the facade steel sheet together with the plinth's flashing to the angle installed according to point 6.

36. Continue fastening by applying screws in every second wave.

37. Finish fastening of the external cladding.

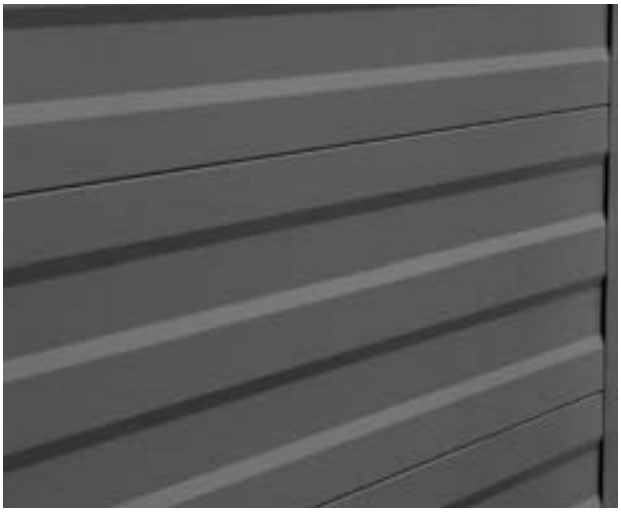

38. Enjoy the aesthetic look of Ruukki's liner trays.

Ruukki LT100-600S

Effective width [mm]	Depth [mm]	Support width End supports [mm]
600	100	50

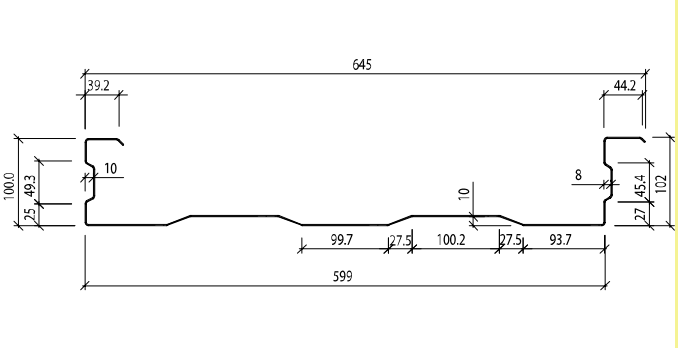

L.p.	Thickness nominal	Thickness core	Weight	Limit yield point	Tensile strength	Effective moment of inertia. Narrow flange compressed	Effective moment of inertia. Wide flange compressed	Effective sectional modulus. Narrow flange compressed	Effective sectional modulus. Wide flange compressed	Max. bending moment in span. Narrow flange compressed	Max. bending moment in span. Wide flange compressed
A	t_{nom}	t_{core}	g	f_y	f_u	$I_{r,a}$	$I_{r,i}$	$W_{r,a}$	$W_{r,i}$	$M_{r,a}$	$M_{r,i}$
B	mm	mm	kg/m²	MPa	MPa	cm⁴/m	cm⁴/m	cm³/m	cm³/m	kNm/m	kNm/m
1.	0.75	0.71	8.99	320.0	390.0	99.102	68.992	10.176	13.383	2.61	3.43
2.	0.88	0.84	10.54	320.0	390.0	124.571	86.145	13.207	17.141	3.38	4.39
3.	1.00	0.96	11.97	320.0	390.0	147.919	105.547	16.797	20.027	4.30	5.13
4.	1.25	1.21	14.94	320.0	390.0	196.845	151.749	24.566	26.242	6.29	6.72
5.	1.50	1.46	17.91	320.0	390.0	243.209	205.198	30.793	32.633	7.88	8.35

1-span structure – Pressure

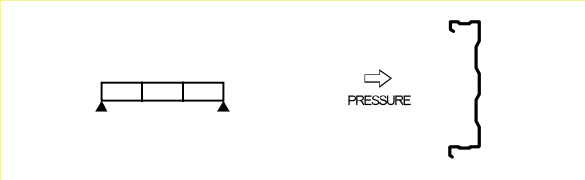

Thickness [mm]	State	Span length L in [m]																						
		3.00	3.25	3.50	3.75	4.00	4.25	4.50	4.75	5.00	5.25	5.50	5.75	6.00	6.25	6.50	6.75	7.00	7.25	7.50	7.75	8.00	8.25	8.50
		Admissible continuous uniform load [kN/m²] with span length L in [m]																						
0.75	1. SGN	2.37	2.09	1.79	1.55	1.36	1.19	1.06	0.94	0.85	0.77	0.70	0.64	0.58	0.53	0.50	0.45	0.42	0.40	0.37	0.34	0.32	0.31	0.29
	2. L/150	3.99	3.13	2.51	2.04	1.68	1.40	1.18	1.01	0.86	0.75	0.65	0.57	0.49	0.44	0.39	0.35	0.31	0.28	0.26	0.23	0.21	0.20	0.18
	3. L/200	2.99	2.35	1.88	1.53	1.26	1.05	0.90	0.75	0.65	0.56	0.49	0.43	0.37	0.33	0.29	0.27	0.23	0.21	0.19	0.17	0.16	0.15	0.14
0.88	1. SGN	3.33	2.80	2.39	2.07	1.81	1.59	1.40	1.25	1.13	1.02	0.92	0.84	0.77	0.71	0.65	0.60	0.55	0.52	0.48	0.45	0.43	0.40	0.37
	2. L/150	5.01	3.94	3.16	2.57	2.11	1.76	1.48	1.26	1.08	0.93	0.81	0.71	0.63	0.55	0.49	0.44	0.40	0.36	0.32	0.29	0.27	0.24	0.22
	3. L/200	3.76	2.96	2.37	1.92	1.58	1.33	1.11	0.95	0.81	0.70	0.61	0.54	0.47	0.41	0.37	0.33	0.30	0.27	0.25	0.22	0.20	0.18	0.17
1.00	1. SGN	4.15	3.51	3.01	2.60	2.27	2.00	1.78	1.58	1.42	1.28	1.16	1.05	0.97	0.88	0.82	0.75	0.70	0.65	0.61	0.57	0.53	0.50	0.47
	2. L/150	5.95	4.68	3.75	3.05	2.51	2.09	1.76	1.50	1.28	1.11	0.97	0.85	0.75	0.66	0.59	0.53	0.47	0.42	0.38	0.34	0.31	0.29	0.26
	3. L/200	4.46	3.51	2.81	2.29	1.88	1.57	1.32	1.12	0.96	0.83	0.72	0.63	0.55	0.49	0.44	0.39	0.35	0.31	0.29	0.26	0.24	0.21	0.20
1.25	1. SGN	5.73	4.88	4.21	3.66	3.21	2.84	2.53	2.27	2.04	1.85	1.68	1.53	1.41	1.29	1.19	1.10	1.02	0.94	0.88	0.82	0.77	0.72	0.68
	2. L/150	7.92	6.23	4.99	4.06	3.34	2.78	2.35	1.99	1.71	1.48	1.28	1.12	0.99	0.88	0.78	0.69	0.62	0.57	0.51	0.46	0.42	0.38	0.35
	3. L/200	5.94	4.67	3.74	3.04	2.51	2.09	1.76	1.50	1.28	1.11	0.96	0.85	0.74	0.66	0.59	0.52	0.46	0.42	0.38	0.35	0.31	0.29	0.26
1.50	1. SGN	7.09	6.04	5.22	4.54	3.99	3.53	3.16	2.83	2.55	2.32	2.11	1.93	1.77	1.63	1.51	1.40	1.30	1.21	1.13	1.06	1.00	0.94	0.88
	2. L/150	9.78	7.69	6.16	5.01	4.13	3.44	2.90	2.47	2.11	1.82	1.59	1.39	1.22	1.08	0.96	0.86	0.77	0.69	0.62	0.57	0.51	0.47	0.43
	3. L/200	7.34	5.77	4.62	3.76	3.10	2.58	2.18	1.85	1.59	1.37	1.19	1.04	0.92	0.81	0.71	0.64	0.58	0.52	0.47	0.42	0.39	0.35	0.32

1-span structure – Suction

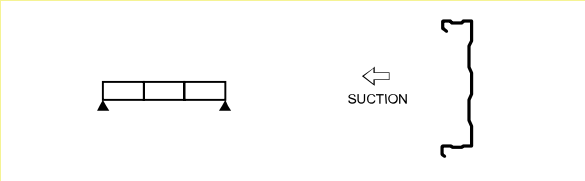

Thickness [mm]	State	Span length L in [m]																						
		3.00	3.25	3.50	3.75	4.00	4.25	4.50	4.75	5.00	5.25	5.50	5.75	6.00	6.25	6.50	6.75	7.00	7.25	7.50	7.75	8.00	8.25	8.50
		Admissible continuous uniform load [kN/m²] with span length L in [m]																						
0.75	1. SGN	3.08	2.62	2.26	1.97	1.73	1.53	1.36	1.23	1.11	1.01	0.91	0.84	0.77	0.71	0.66	0.61	0.56	0.53	0.49	0.46	0.43	0.41	0.38
	2. L/150	2.77	2.18	1.75	1.42	1.17	0.98	0.82	0.70	0.60	0.52	0.46	0.39	0.35	0.31	0.28	0.25	0.22	0.20	0.18	0.16	0.15	0.13	0.12
	3. L/200	2.08	1.63	1.31	1.06	0.88	0.73	0.62	0.52	0.45	0.39	0.33	0.30	0.26	0.23	0.20	0.18	0.16	0.14	0.13	0.12	0.11	0.10	0.09
0.88	1. SGN	3.94	3.36	2.90	2.52	2.22	1.96	1.75	1.57	1.42	1.28	1.17	1.07	0.98	0.91	0.84	0.78	0.72	0.67	0.63	0.59	0.55	0.52	0.49
	2. L/150	3.47	2.72	2.18	1.77	1.47	1.22	1.03	0.87	0.75	0.64	0.56	0.49	0.43	0.38	0.34	0.31	0.27	0.24	0.22	0.20	0.18	0.17	0.15
	3. L/200	2.60	2.04	1.64	1.33	1.10	0.91	0.77	0.66	0.56	0.49	0.42	0.37	0.33	0.29	0.26	0.23	0.21	0.18	0.16	0.15	0.13	0.12	0.11
1.00	1. SGN	4.60	3.92	3.38	2.94	2.59	2.29	2.05	1.84	1.66	1.50	1.37	1.25	1.15	1.06	0.98	0.91	0.85	0.79	0.74	0.68	0.65	0.61	0.57
	2. L/150	4.25	3.34	2.67	2.17	1.79	1.49	1.26	1.07	0.92	0.79	0.69	0.60	0.53	0.46	0.42	0.37	0.33	0.30	0.27	0.25	0.23	0.20	0.19
	3. L/200	3.19	2.50	2.00	1.62	1.34	1.12	0.94	0.80	0.69	0.60	0.52	0.45	0.40	0.35	0.31	0.28	0.25	0.22	0.20	0.19	0.17	0.15	0.14
1.25	1. SGN	6.03	5.14	4.43	3.86	3.39	3.01	2.68	2.41	2.17	1.97	1.79	1.64	1.51	1.39	1.29	1.19	1.10	1.03	0.97	0.90	0.84	0.79	0.75
	2. L/150	6.10	4.80	3.84	3.12	2.57	2.15	1.81	1.54	1.32	1.14	0.99	0.87	0.76	0.67	0.60	0.53	0.48	0.43	0.39	0.35	0.32	0.29	0.27
	3. L/200	4.58	3.60	2.88	2.34	1.93	1.61	1.36	1.15	0.99	0.85	0.75	0.65	0.58	0.51	0.45	0.40	0.36	0.33	0.30	0.26	0.24	0.21	0.20
1.50	1. SGN	7.50	6.39	5.51	4.80	4.22	3.74	3.33	2.99	2.70	2.45	2.23	2.04	1.88	1.73	1.60	1.48	1.37	1.28	1.20	1.12	1.05	0.99	0.93
	2. L/150	8.25	6.49	5.20	4.22	3.48	2.90	2.45	2.08	1.78	1.54	1.34	1.18	1.03	0.91	0.81	0.72	0.65	0.58	0.52	0.48	0.43	0.40	0.36
	3. L/200	6.19	4.87	3.90	3.17	2.61	2.18	1.83	1.56	1.33	1.15	1.00	0.88	0.77	0.68	0.61	0.54	0.49	0.44	0.40	0.36	0.33	0.30	0.27

Calculations according to ENV 1993-1-3.
Continuous uniform load in [kN/m²].
Compare design load with values in tables (1.SGN).
For serviceability limit state characteristic values were adopted.
Compare characteristic load with values in tables (2;3. SGU).

1. Load limit state (SGN; Q).
2. Serviceability limit state. Deflection limit f = L/150 (SGU; Q_{ch}).
3. Serviceability limit state. Deflection limit f = L/200 (SGU; Q_{ch}).

Ruukki LT125-600S

Effective width [mm]	Depth [mm]	Support width End supports [mm]
600	125	50

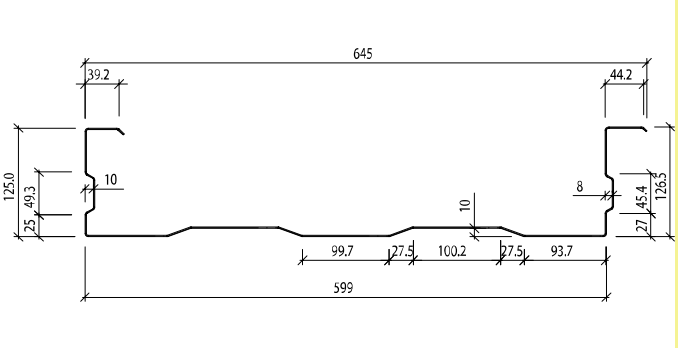

L.p.	Thickness nominal	Thickness core	Weight	Limit yield point	Tensile strength	Effective moment of inertia. Narrow flange compressed	Effective moment of inertia. Wide flange compressed	Effective sectional modulus. Narrow flange compressed	Effective sectional modulus. Wide flange compressed	Max. bending moment in span. Narrow flange compressed	Max. bending moment in span. Wide flange compressed
A	t_{nom}	t_{core}	g	f_y	f_u	$I_{r,a}$	$I_{r,i}$	$W_{r,a}$	$W_{r,i}$	$M_{r,a}$	$M_{r,i}$
B	mm	mm	kg/m²	MPa	MPa	cm⁴/m	cm⁴/m	cm³/m	cm³/m	kNm/m	kNm/m
1.	0.75	0.71	9.48	320.0	390.0	154.317	114.118	13.000	17.508	3.33	4.48
2.	0.88	0.84	11.11	320.0	390.0	199.617	143.356	16.871	22.852	4.32	5.85
3.	1.00	0.96	12.62	320.0	390.0	242.393	175.767	21.883	26.852	5.60	6.87
4.	1.25	1.21	15.76	320.0	390.0	326.353	248.407	32.840	35.148	8.41	9.00
5.	1.50	1.46	18.89	320.0	390.0	408.407	331.242	41.625	43.707	10.66	11.19

1-span structure – Pressure

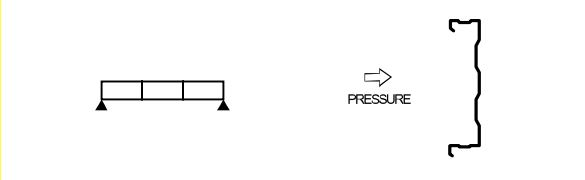

Thickness [mm]	State	Span length L in [m]																						
		4.00	4.25	4.50	4.75	5.00	5.25	5.50	5.75	6.00	6.25	6.50	6.75	7.00	7.25	7.50	7.75	8.00	8.25	8.50	8.75	9.00	9.25	9.50
		Admissible continuous uniform load [kN/m²] with span length L in [m]																						
0.75	1. SGN	1.74	1.53	1.37	1.22	1.10	0.99	0.90	0.82	0.75	0.69	0.64	0.59	0.55	0.51	0.47	0.44	0.42	0.39	0.37	0.35	0.33	0.31	0.29
	2. L/150	2.62	2.18	1.84	1.56	1.35	1.16	1.01	0.88	0.78	0.68	0.61	0.54	0.49	0.43	0.40	0.36	0.32	0.30	0.27	0.25	0.23	0.21	0.19
	3. L/200	1.96	1.64	1.38	1.17	1.01	0.87	0.76	0.67	0.59	0.52	0.46	0.41	0.37	0.33	0.30	0.27	0.25	0.22	0.21	0.19	0.17	0.16	0.15
0.88	1. SGN	2.34	2.05	1.82	1.62	1.45	1.30	1.18	1.07	0.98	0.90	0.83	0.77	0.71	0.66	0.61	0.57	0.53	0.50	0.47	0.44	0.42	0.40	0.37
	2. L/150	3.39	2.83	2.38	2.02	1.73	1.50	1.30	1.14	1.00	0.89	0.79	0.71	0.64	0.58	0.52	0.46	0.42	0.39	0.35	0.32	0.30	0.28	0.26
	3. L/200	2.54	2.12	1.78	1.52	1.30	1.12	0.98	0.86	0.75	0.66	0.59	0.52	0.47	0.42	0.38	0.35	0.32	0.29	0.26	0.24	0.22	0.21	0.19
1.00	1. SGN	2.98	2.62	2.32	2.07	1.86	1.67	1.52	1.38	1.26	1.15	1.06	0.98	0.91	0.84	0.78	0.73	0.68	0.64	0.60	0.57	0.53	0.50	0.48
	2. L/150	4.11	3.43	2.89	2.46	2.11	1.82	1.58	1.38	1.22	1.08	0.95	0.86	0.77	0.69	0.62	0.57	0.52	0.47	0.43	0.40	0.36	0.34	0.31
	3. L/200	3.08	2.57	2.17	1.84	1.59	1.36	1.19	1.04	0.91	0.81	0.71	0.64	0.57	0.52	0.47	0.42	0.38	0.35	0.32	0.29	0.27	0.25	0.23
1.25	1. SGN	4.28	3.79	3.38	3.03	2.73	2.47	2.24	2.05	1.88	1.73	1.60	1.48	1.37	1.27	1.19	1.11	1.04	0.97	0.92	0.86	0.81	0.77	0.72
	2. L/150	5.54	4.62	3.89	3.31	2.83	2.45	2.13	1.86	1.64	1.45	1.29	1.15	1.03	0.93	0.84	0.76	0.69	0.63	0.57	0.53	0.49	0.45	0.41
	3. L/200	4.15	3.46	2.92	2.48	2.13	1.84	1.60	1.40	1.23	1.09	0.97	0.86	0.77	0.69	0.63	0.57	0.52	0.47	0.43	0.39	0.36	0.34	0.31
1.50	1. SGN	5.42	4.80	4.28	3.84	3.46	3.14	2.86	2.61	2.40	2.21	2.04	1.89	1.76	1.64	1.53	1.43	1.34	1.26	1.18	1.12	1.05	1.01	0.95
	2. L/150	6.93	5.78	4.87	4.14	3.55	3.07	2.67	2.33	2.05	1.82	1.61	1.44	1.29	1.16	1.05	0.95	0.86	0.79	0.72	0.67	0.61	0.57	0.51
	3. L/200	5.20	4.33	3.65	3.10	2.66	2.30	2.00	1.75	1.54	1.37	1.21	1.08	0.97	0.87	0.79	0.71	0.65	0.59	0.54	0.50	0.46	0.42	0.39

1-span structure – Suction

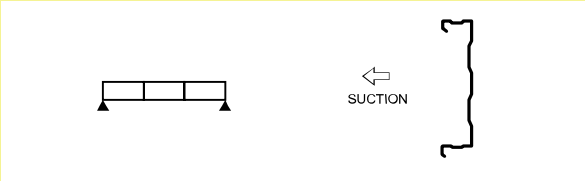

Thickness [mm]	State	Span length L in [m]																						
		4.00	4.25	4.50	4.75	5.00	5.25	5.50	5.75	6.00	6.25	6.50	6.75	7.00	7.25	7.50	7.75	8.00	8.25	8.50	8.75	9.00	9.25	9.50
		Admissible continuous uniform load [kN/m²] with span length L in [m]																						
0.75	1. SGN	2.26	2.01	1.79	1.60	1.45	1.31	1.19	1.09	1.00	0.93	0.86	0.79	0.75	0.69	0.65	0.61	0.57	0.53	0.50	0.47	0.45	0.42	0.40
	2. L/150	1.94	1.62	1.36	1.16	0.99	0.86	0.74	0.65	0.57	0.51	0.46	0.41	0.37	0.33	0.29	0.27	0.24	0.22	0.20	0.18	0.17	0.16	0.14
	3. L/200	1.45	1.21	1.02	0.86	0.74	0.64	0.55	0.49	0.43	0.38	0.34	0.30	0.27	0.24	0.22	0.20	0.18	0.16	0.15	0.14	0.13	0.12	0.11
0.88	1. SGN	2.95	2.62	2.34	2.09	1.89	1.72	1.56	1.43	1.31	1.21	1.12	1.04	0.97	0.90	0.84	0.79	0.74	0.70	0.65	0.62	0.58	0.55	0.52
	2. L/150	2.43	2.03	1.71	1.46	1.25	1.08	0.94	0.82	0.72	0.64	0.57	0.51	0.45	0.41	0.36	0.34	0.30	0.28	0.25	0.23	0.21	0.20	0.18
	3. L/200	1.82	1.52	1.28	1.09	0.93	0.81	0.70	0.62	0.54	0.48	0.43	0.38	0.34	0.31	0.28	0.25	0.23	0.21	0.19	0.17	0.16	0.15	0.14
1.00	1. SGN	3.47	3.07	2.74	2.46	2.22	2.02	1.84	1.68	1.54	1.42	1.32	1.22	1.13	1.06	0.99	0.92	0.87	0.82	0.77	0.73	0.68	0.64	0.62
	2. L/150	2.98	2.49	2.09	1.78	1.53	1.32	1.15	1.00	0.88	0.78	0.70	0.62	0.55	0.50	0.45	0.40	0.37	0.34	0.31	0.28	0.26	0.24	0.22
	3. L/200	2.24	1.86	1.57	1.34	1.14	0.99	0.86	0.76	0.67	0.59	0.52	0.47	0.42	0.38	0.34	0.31	0.28	0.25	0.23	0.21	0.20	0.18	0.17
1.25	1. SGN	4.55	4.02	3.59	3.22	2.91	2.64	2.41	2.20	2.02	1.86	1.72	1.60	1.48	1.39	1.29	1.21	1.14	1.07	1.00	0.94	0.89	0.84	0.80
	2. L/150	4.22	3.51	2.96	2.52	2.16	1.86	1.62	1.42	1.25	1.10	0.98	0.88	0.79	0.71	0.64	0.58	0.53	0.48	0.44	0.40	0.37	0.34	0.32
	3. L/200	3.16	2.64	2.21	1.88	1.61	1.39	1.21	1.06	0.94	0.83	0.74	0.66	0.59	0.54	0.48	0.43	0.40	0.36	0.33	0.30	0.27	0.25	0.23
1.50	1. SGN	5.65	5.01	4.46	4.01	3.62	3.28	2.99	2.73	2.51	2.32	2.14	1.98	1.85	1.72	1.61	1.51	1.41	1.32	1.25	1.18	1.12	1.05	1.00
	2. L/150	5.62	4.69	3.95	3.35	2.88	2.49	2.16	1.89	1.67	1.47	1.31	1.17	1.05	0.95	0.85	0.77	0.70	0.64	0.58	0.53	0.50	0.45	0.42
	3. L/200	4.21	3.51	2.96	2.52	2.16	1.86	1.61	1.42	1.25	1.10	0.98	0.88	0.78	0.71	0.64	0.58	0.53	0.48	0.44	0.40	0.37	0.35	0.31

Calculations according to ENV 1993-1-3.

Continuous uniform load in [kN/m²].

Compare design load with values in tables (1.SGN).

For serviceability limit state characteristic values were adopted.

Compare characteristic load with values in tables (2;3. SGU).

1. Load limit state (SGN; Q).

2. Serviceability limit state. Deflection limit f = L/150 (SGU; Q_{ch}).

3. Serviceability limit state. Deflection limit f = L/200 (SGU; Q_{ch}).

Ruukki LT150-600S

Effective width [mm]	Depth [mm]	Support width End supports [mm]
600	150	50

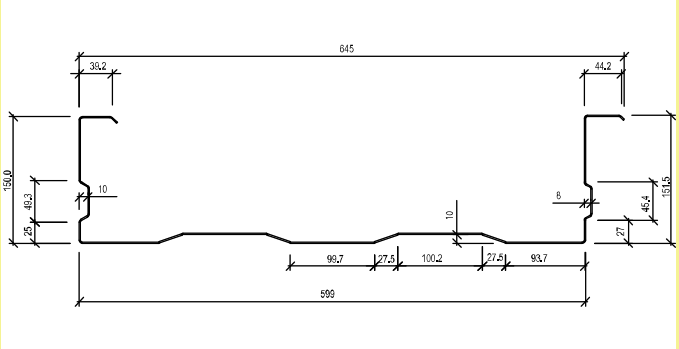

L.p.	Thickness nominal	Thickness core	Weight	Limit yield point	Tensile strength	Effective moment of inertia. Narrow flange compressed	Effective moment of inertia. Wide flange compressed	Effective sectional modulus. Narrow flange compressed	Effective sectional modulus. Wide flange compressed	Max. bending moment in span. Narrow flange compressed	Max. bending moment in span. Wide flange compressed
A	t_{nom}	t_{core}	g	f_y	f_u	I_{ra}	I_{ri}	W_{ra}	W_{ri}	M_{ra}	M_{ri}
B	mm	mm	kg/m²	MPa	MPa	cm⁴/m	cm⁴/m	cm³/m	cm³/m	kNm/m	kNm/m
1.	0.75	0.71	9.97	320.0	390.0	216.147	172.612	14.262	21.824	3.65	5.59
2.	0.88	0.84	11.69	320.0	390.0	282.761	216.420	20.906	28.297	5.35	7.24
3.	1.00	0.96	13.28	320.0	390.0	346.752	263.621	28.168	34.273	7.21	8.77
4.	1.25	1.21	16.58	320.0	390.0	481.810	375.042	40.922	44.992	10.48	11.52
5.	1.50	1.46	19.87	320.0	390.0	614.771	494.851	52.027	55.922	13.32	14.32

1-span structure – Pressure

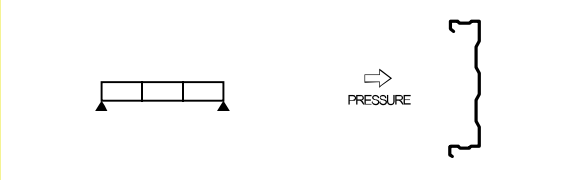

Thickness [mm]	State	Span length L in [m]																						
		5.00	5.25	5.50	5.75	6.00	6.25	6.50	6.75	7.00	7.25	7.50	7.75	8.00	8.25	8.50	8.75	9.00	9.25	9.50	9.75	10.00	10.25	10.50
		Admissible continuous uniform load [kN/m²] with span length L in [m]																						
0.75	1. SGN	1.25	1.12	1.01	0.93	0.85	0.77	0.71	0.66	0.61	0.56	0.53	0.49	0.46	0.42	0.40	0.38	0.36	0.34	0.32	0.30	0.28	0.28	0.26
	2. L/150	1.88	1.62	1.41	1.24	1.09	0.96	0.85	0.76	0.69	0.61	0.56	0.50	0.45	0.41	0.39	0.35	0.32	0.30	0.27	0.25	0.23	0.22	0.20
	3. L/200	1.40	1.21	1.06	0.93	0.81	0.72	0.64	0.57	0.52	0.46	0.42	0.38	0.35	0.32	0.29	0.26	0.24	0.22	0.21	0.19	0.18	0.17	0.16
0.88	1. SGN	1.79	1.63	1.46	1.33	1.21	1.11	1.02	0.94	0.87	0.80	0.75	0.69	0.65	0.60	0.56	0.53	0.50	0.47	0.45	0.42	0.40	0.38	0.36
	2. L/150	2.45	2.12	1.84	1.62	1.42	1.25	1.11	1.00	0.90	0.81	0.73	0.66	0.61	0.54	0.50	0.46	0.42	0.39	0.36	0.33	0.31	0.28	0.26
	3. L/200	1.84	1.59	1.38	1.21	1.07	0.94	0.84	0.75	0.66	0.61	0.55	0.50	0.45	0.41	0.38	0.35	0.32	0.29	0.27	0.25	0.23	0.21	0.20
1.00	1. SGN	2.35	2.13	1.93	1.75	1.60	1.46	1.35	1.24	1.14	1.06	0.99	0.92	0.85	0.79	0.74	0.70	0.66	0.62	0.58	0.55	0.52	0.49	0.47
	2. L/150	3.01	2.60	2.26	1.98	1.74	1.54	1.37	1.23	1.10	0.99	0.89	0.81	0.73	0.67	0.62	0.56	0.51	0.48	0.44	0.41	0.38	0.35	0.33
	3. L/200	2.26	1.95	1.70	1.48	1.31	1.16	1.03	0.92	0.82	0.74	0.67	0.61	0.55	0.50	0.46	0.42	0.39	0.36	0.33	0.30	0.28	0.26	0.25
1.25	1. SGN	3.39	3.07	2.79	2.54	2.33	2.13	1.97	1.82	1.68	1.56	1.46	1.36	1.27	1.19	1.11	1.04	0.98	0.93	0.87	0.83	0.78	0.74	0.71
	2. L/150	4.18	3.62	3.15	2.75	2.42	2.14	1.90	1.70	1.52	1.37	1.24	1.12	1.02	0.93	0.85	0.78	0.72	0.66	0.61	0.57	0.53	0.48	0.45
	3. L/200	3.14	2.71	2.36	2.06	1.82	1.61	1.43	1.28	1.15	1.03	0.93	0.84	0.76	0.69	0.64	0.58	0.54	0.49	0.45	0.42	0.39	0.36	0.34
1.50	1. SGN	4.31	3.91	3.56	3.25	2.98	2.75	2.54	2.35	2.18	2.03	1.89	1.77	1.66	1.56	1.46	1.38	1.30	1.23	1.16	1.10	1.05	0.99	0.95
	2. L/150	5.34	4.61	4.01	3.51	3.09	2.73	2.43	2.17	1.95	1.75	1.58	1.43	1.30	1.19	1.08	1.00	0.91	0.84	0.78	0.72	0.67	0.62	0.58
	3. L/200	4.01	3.46	3.01	2.63	2.32	2.05	1.82	1.63	1.46	1.31	1.19	1.08	0.98	0.89	0.82	0.75	0.68	0.63	0.58	0.54	0.50	0.46	0.43

1-span structure – Suction

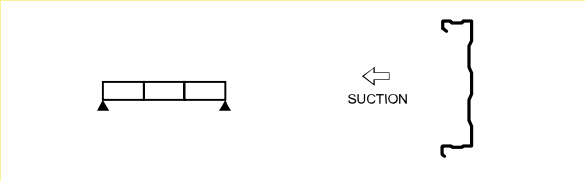

Thickness [mm]	State	Span length L in [m]																						
		5.00	5.25	5.50	5.75	6.00	6.25	6.50	6.75	7.00	7.25	7.50	7.75	8.00	8.25	8.50	8.75	9.00	9.25	9.50	9.75	10.00	10.25	10.50
		Admissible continuous uniform load [kN/m²] with span length L in [m]																						
0.75	1. SGN	1.81	1.64	1.49	1.36	1.26	1.16	1.07	0.99	0.92	0.86	0.80	0.75	0.71	0.66	0.62	0.60	0.56	0.53	0.50	0.48	0.45	0.43	0.41
	2. L/150	1.50	1.29	1.12	0.99	0.86	0.76	0.68	0.61	0.55	0.49	0.44	0.41	0.37	0.33	0.31	0.28	0.26	0.24	0.22	0.20	0.19	0.17	0.16
	3. L/200	1.12	0.97	0.85	0.74	0.65	0.57	0.51	0.45	0.41	0.37	0.33	0.30	0.28	0.25	0.23	0.21	0.19	0.18	0.17	0.15	0.14	0.13	0.12
0.88	1. SGN	2.34	2.12	1.94	1.77	1.63	1.50	1.38	1.28	1.19	1.11	1.04	0.97	0.91	0.86	0.81	0.76	0.72	0.68	0.65	0.62	0.59	0.56	0.53
	2. L/150	1.88	1.63	1.41	1.24	1.09	0.97	0.85	0.77	0.69	0.62	0.56	0.50	0.46	0.42	0.38	0.35	0.32	0.30	0.27	0.25	0.24	0.22	0.20
	3. L/200	1.41	1.22	1.06	0.93	0.82	0.73	0.65	0.58	0.52	0.47	0.42	0.38	0.35	0.32	0.29	0.27	0.24	0.22	0.21	0.19	0.18	0.16	0.15
1.00	1. SGN	2.84	2.57	2.34	2.14	1.98	1.82	1.68	1.56	1.45	1.35	1.26	1.18	1.11	1.04	0.98	0.93	0.88	0.83	0.79	0.75	0.71	0.67	0.64
	2. L/150	2.29	1.98	1.72	1.51	1.33	1.17	1.04	0.93	0.84	0.75	0.68	0.61	0.56	0.51	0.46	0.43	0.39	0.36	0.33	0.31	0.29	0.27	0.25
	3. L/200	1.72	1.48	1.29	1.13	0.99	0.88	0.79	0.70	0.63	0.57	0.51	0.46	0.42	0.38	0.35	0.32	0.29	0.27	0.25	0.23	0.22	0.20	0.19
1.25	1. SGN	3.72	3.38	3.08	2.82	2.59	2.39	2.21	2.04	1.90	1.77	1.66	1.55	1.46	1.37	1.29	1.22	1.15	1.09	1.03	0.98	0.93	0.89	0.84
	2. L/150	3.26	2.81	2.45	2.14	1.88	1.67	1.49	1.33	1.19	1.07	0.97	0.87	0.80	0.73	0.66	0.60	0.56	0.51	0.47	0.44	0.41	0.37	0.35
	3. L/200	2.44	2.11	1.83	1.61	1.41	1.25	1.11	0.99	0.89	0.80	0.72	0.65	0.59	0.54	0.50	0.46	0.42	0.39	0.36	0.33	0.31	0.28	0.26
1.50	1. SGN	4.63	4.20	3.83	3.50	3.22	2.96	2.74	2.54	2.36	2.20	2.06	1.93	1.81	1.70	1.60	1.51	1.43	1.35	1.28	1.21	1.16	1.10	1.05
	2. L/150	4.30	3.71	3.23	2.83	2.49	2.20	1.95	1.75	1.56	1.41	1.28	1.16	1.05	0.96	0.88	0.80	0.74	0.68	0.63	0.57	0.54	0.50	0.47
	3. L/200	3.22	2.79	2.42	2.12	1.87	1.65	1.47	1.31	1.18	1.06	0.96	0.87	0.79	0.72	0.66	0.61	0.56	0.52	0.47	0.44	0.41	0.38	0.35

Calculations according to ENV 1993-1-3.

Continuous uniform load in [kN/m²].

Compare design load with values in tables (1.SGN).

For serviceability limit state characteristic values were adopted.

Compare characteristic load with values in tables (2;3. SGU).

1. Load limit state (SGN; Q).

2. Serviceability limit state. Deflection limit f = L/150 (SGU; Q_{ch}).

3. Serviceability limit state. Deflection limit f = L/200 (SGU; Q_{ch}).

Ruukki LT200-600S

Effective width [mm]	Depth [mm]	Support width End supports [mm]
600	200	50

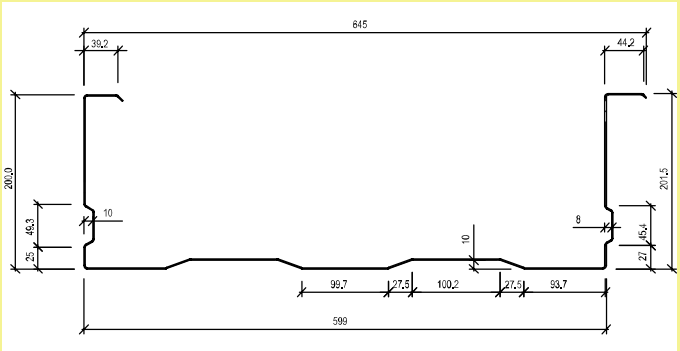

L.p.	Thickness nominal	Thickness core	Weight	Limit yield point	Tensile strength	Effective moment of inertia. Narrow flange compressed	Effective moment of inertia. Wide flange compressed	Effective sectional modulus. Narrow flange compressed	Effective sectional modulus. Wide flange compressed	Max. bending moment in span. Narrow flange compressed	Max. bending moment in span. Wide flange compressed
A	t_{nom}	t_{core}	g	f_y	f_u	$I_{,a}$	$I_{,i}$	$W_{,a}$	$W_{,i}$	$M_{,ca}$	$M_{,ci}$
B	mm	mm	kg/m²	MPa	MPa	cm⁴/m	cm⁴/m	cm³/m	cm³/m	kNm/m	kNm/m
1.	0.75	0.71	10.95	320.0	390.0	369.601	335.244	18.883	31.219	4.83	7.99
2.	0.88	0.84	12.84	320.0	390.0	487.415	421.352	26.434	40.602	6.77	10.39
3.	1.00	0.96	14.58	320.0	390.0	605.246	502.996	34.207	49.715	8.76	12.73
4.	1.25	1.21	18.21	320.0	390.0	858.398	713.711	55.359	66.879	14.17	17.12
5.	1.50	1.46	21.83	320.0	390.0	1122.299	947.599	73.449	83.520	18.80	21.38

1-span structure – Pressure

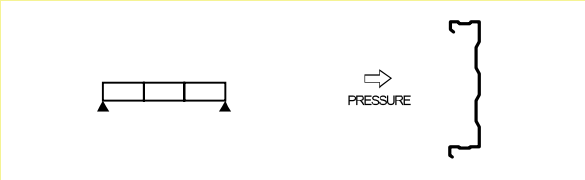

Thickness [mm]	State	Span length L in [m]																						
		6.00	6.25	6.50	6.75	7.00	7.25	7.50	7.75	8.00	8.25	8.50	8.75	9.00	9.25	9.50	9.75	10.00	10.25	10.50	10.75	11.00	11.25	11.50
		Admissible continuous uniform load [kN/m²] with span length L in [m]																						
0.75	1. SGN	1.08	0.99	0.91	0.85	0.78	0.73	0.68	0.64	0.59	0.56	0.52	0.50	0.47	0.44	0.42	0.40	0.38	0.36	0.35	0.33	0.32	0.29	0.29
	2. L/150	1.85	1.64	1.46	1.31	1.17	1.06	0.95	0.86	0.78	0.72	0.65	0.60	0.55	0.51	0.46	0.43	0.40	0.37	0.35	0.33	0.30	0.28	0.26
	3. L/200	1.39	1.23	1.10	0.98	0.87	0.79	0.71	0.65	0.59	0.54	0.50	0.45	0.41	0.39	0.35	0.33	0.30	0.28	0.26	0.24	0.23	0.21	0.20
0.88	1. SGN	1.54	1.41	1.30	1.20	1.11	1.03	0.96	0.89	0.84	0.78	0.73	0.69	0.65	0.61	0.58	0.55	0.52	0.49	0.47	0.45	0.43	0.41	0.39
	2. L/150	2.45	2.17	1.93	1.72	1.54	1.39	1.25	1.14	1.03	0.94	0.86	0.79	0.72	0.68	0.62	0.58	0.53	0.50	0.45	0.42	0.40	0.37	0.35
	3. L/200	1.84	1.63	1.45	1.29	1.16	1.05	0.94	0.85	0.78	0.71	0.65	0.59	0.54	0.50	0.46	0.42	0.40	0.37	0.34	0.32	0.30	0.28	0.26
1.00	1. SGN	2.03	1.86	1.70	1.57	1.46	1.35	1.25	1.17	1.09	1.02	0.96	0.90	0.85	0.80	0.75	0.71	0.67	0.64	0.61	0.58	0.56	0.52	0.50
	2. L/150	3.04	2.69	2.39	2.14	1.92	1.72	1.55	1.41	1.28	1.17	1.07	0.98	0.90	0.83	0.77	0.71	0.66	0.62	0.57	0.53	0.50	0.46	0.44
	3. L/200	2.28	2.02	1.80	1.60	1.44	1.29	1.17	1.06	0.96	0.88	0.81	0.73	0.68	0.63	0.58	0.53	0.50	0.45	0.42	0.40	0.37	0.34	0.32
1.25	1. SGN	3.14	2.89	2.66	2.46	2.28	2.11	1.96	1.83	1.71	1.60	1.50	1.41	1.32	1.24	1.18	1.11	1.05	1.00	0.94	0.90	0.85	0.81	0.77
	2. L/150	4.31	3.82	3.40	3.03	2.72	2.45	2.21	2.00	1.82	1.66	1.51	1.39	1.28	1.17	1.08	1.00	0.93	0.86	0.81	0.75	0.70	0.65	0.61
	3. L/200	3.24	2.86	2.55	2.27	2.04	1.84	1.66	1.50	1.37	1.24	1.14	1.04	0.96	0.88	0.82	0.76	0.70	0.65	0.61	0.56	0.53	0.49	0.46
1.50	1. SGN	4.23	3.90	3.61	3.35	3.12	2.90	2.71	2.54	2.39	2.24	2.11	1.99	1.87	1.78	1.68	1.59	1.51	1.43	1.36	1.30	1.24	1.18	1.12
	2. L/150	5.64	4.99	4.44	3.96	3.55	3.20	2.89	2.62	2.38	2.17	1.98	1.82	1.67	1.54	1.42	1.31	1.22	1.13	1.05	0.98	0.92	0.86	0.80
	3. L/200	4.23	3.74	3.33	2.97	2.66	2.40	2.17	1.97	1.79	1.63	1.49	1.37	1.26	1.16	1.07	0.99	0.92	0.85	0.79	0.74	0.69	0.64	0.60

1-span structure – Suction

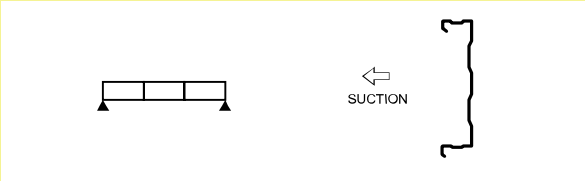

Thickness [mm]	State	Span length L in [m]																						
		6.00	6.25	6.50	6.75	7.00	7.25	7.50	7.75	8.00	8.25	8.50	8.75	9.00	9.25	9.50	9.75	10.00	10.25	10.50	10.75	11.00	11.25	11.50
		Admissible continuous uniform load [kN/m²] with span length L in [m]																						
0.75	1. SGN	1.79	1.65	1.52	1.42	1.32	1.23	1.15	1.07	1.00	0.95	0.89	0.84	0.80	0.75	0.72	0.68	0.65	0.61	0.59	0.56	0.53	0.51	0.49
	2. L/150	1.68	1.49	1.32	1.19	1.06	0.96	0.86	0.78	0.71	0.64	0.59	0.54	0.50	0.46	0.43	0.40	0.36	0.34	0.31	0.30	0.28	0.25	0.24
	3. L/200	1.26	1.12	1.00	0.89	0.80	0.72	0.65	0.58	0.53	0.48	0.44	0.41	0.37	0.35	0.31	0.30	0.27	0.26	0.24	0.22	0.21	0.19	0.18
0.88	1. SGN	2.33	2.15	1.98	1.84	1.71	1.60	1.49	1.40	1.31	1.23	1.16	1.10	1.04	0.98	0.93	0.88	0.84	0.80	0.76	0.73	0.69	0.66	0.63
	2. L/150	2.12	1.88	1.67	1.49	1.33	1.20	1.09	0.98	0.89	0.82	0.74	0.68	0.63	0.57	0.53	0.49	0.45	0.42	0.40	0.36	0.35	0.32	0.30
	3. L/200	1.59	1.40	1.25	1.12	1.00	0.90	0.81	0.74	0.67	0.62	0.56	0.51	0.47	0.44	0.40	0.37	0.34	0.32	0.30	0.28	0.26	0.24	0.23
1.00	1. SGN	2.86	2.63	2.43	2.26	2.11	1.96	1.83	1.71	1.61	1.51	1.43	1.34	1.27	1.20	1.14	1.08	1.03	0.98	0.93	0.89	0.85	0.81	0.78
	2. L/150	2.53	2.24	1.99	1.78	1.59	1.43	1.29	1.17	1.07	0.98	0.89	0.82	0.75	0.69	0.64	0.59	0.55	0.50	0.47	0.44	0.41	0.38	0.36
	3. L/200	1.90	1.67	1.49	1.33	1.19	1.07	0.97	0.88	0.80	0.73	0.67	0.61	0.56	0.52	0.48	0.44	0.41	0.38	0.36	0.33	0.31	0.29	0.27
1.25	1. SGN	3.84	3.54	3.27	3.04	2.83	2.63	2.46	2.30	2.16	2.03	1.92	1.81	1.71	1.62	1.54	1.45	1.39	1.32	1.26	1.20	1.15	1.09	1.05
	2. L/150	3.59	3.17	2.82	2.52	2.26	2.03	1.84	1.67	1.51	1.38	1.26	1.16	1.06	0.98	0.91	0.84	0.78	0.72	0.67	0.63	0.57	0.55	0.51
	3. L/200	2.69	2.38	2.12	1.89	1.69	1.52	1.38	1.25	1.13	1.03	0.95	0.87	0.80	0.73	0.68	0.63	0.58	0.54	0.50	0.47	0.44	0.41	0.38
1.50	1. SGN	4.80	4.42	4.09	3.79	3.53	3.29	3.08	2.88	2.70	2.54	2.39	2.26	2.13	2.02	1.92	1.82	1.73	1.65	1.57	1.49	1.43	1.36	1.30
	2. L/150	4.77	4.21	3.75	3.35	3.00	2.70	2.44	2.21	2.01	1.84	1.68	1.54	1.41	1.30	1.20	1.11	1.03	0.95	0.89	0.83	0.77	0.72	0.68
	3. L/200	3.57	3.16	2.81	2.51	2.25	2.02	1.83	1.66	1.50	1.37	1.25	1.15	1.06	0.98	0.90	0.83	0.77	0.72	0.67	0.62	0.58	0.55	0.51

Calculations according to ENV 1993-1-3.

Continuous uniform load in [kN/m²].

Compare design load with values in tables (1.SGN).

For serviceability limit state characteristic values were adopted.

Compare characteristic load with values in tables (2;3. SGU).

1. Load limit state (SGN; Q).

2. Serviceability limit state. Deflection limit f = L/150 (SGU; Q_{ch}).

3. Serviceability limit state. Deflection limit f = L/200 (SGU; Q_{ch}).

Ruukki LT100-600SB

Effective width [mm]	Depth [mm]	Support width End supports [mm]
600	100	50

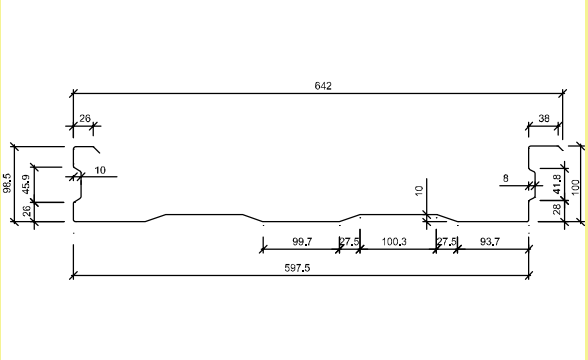

L.p.	Thickness nominal	Thickness core	Weight	Limit yield point	Tensile strength	Effective moment of inertia. Narrow flange compressed	Effective moment of inertia. Wide flange compressed	Effective sectional modulus. Narrow flange compressed	Effective sectional modulus. Wide flange compressed	Max. bending moment in span. Narrow flange compressed	Max. bending moment in span. Wide flange compressed
A	t_{nom}	t_{core}	g	f_y	f_u	$I_{r,a}$	$I_{r,i}$	$W_{r,a}$	$W_{r,i}$	$M_{r,a}$	$M_{r,i}$
B	mm	mm	kg/m²	MPa	MPa	cm⁴/m	cm⁴/m	cm³/m	cm³/m	kNm/m	kNm/m
1.	0.75	0.71	8.79	320.0	390.0	94.792	64.793	9.574	12.711	2.45	3.25
2.	0.88	0.84	10.31	320.0	390.0	116.485	83.301	12.344	15.469	3.16	3.96
3.	1.00	0.96	11.70	320.0	390.0	137.539	102.290	15.563	18.086	3.98	4.63

1-span structure – Pressure

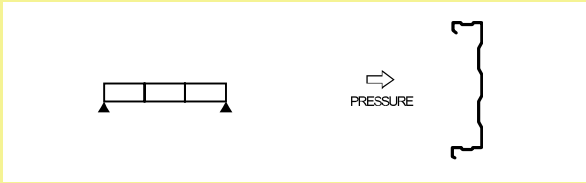

Thickness [mm]	State	Span length L in [m]																						
		3.00	3.25	3.50	3.75	4.00	4.25	4.50	4.75	5.00	5.25	5.50	5.75	6.00	6.25	6.50	6.75	7.00	7.25	7.50	7.75	8.00	8.25	8.50
		Admissible continuous uniform load [kN/m²] with span length L in [m]																						
0.75	1. SGN	2.37	2.00	1.71	1.48	1.29	1.14	1.01	0.90	0.80	0.73	0.66	0.59	0.55	0.50	0.46	0.43	0.40	0.37	0.35	0.33	0.31	0.29	0.27
	2. L/150	3.81	3.00	2.40	1.95	1.61	1.34	1.13	0.96	0.83	0.71	0.62	0.54	0.48	0.42	0.37	0.34	0.30	0.27	0.24	0.22	0.21	0.19	0.17
	3. L/200	2.86	2.25	1.80	1.46	1.21	1.01	0.85	0.72	0.62	0.54	0.46	0.41	0.36	0.32	0.28	0.25	0.23	0.20	0.19	0.17	0.15	0.14	0.13
0.88	1. SGN	3.11	2.62	2.24	1.93	1.68	1.48	1.31	1.17	1.05	0.94	0.86	0.78	0.71	0.65	0.60	0.55	0.51	0.48	0.45	0.41	0.39	0.36	0.34
	2. L/150	4.69	3.68	2.95	2.40	1.98	1.65	1.39	1.18	1.01	0.87	0.76	0.66	0.59	0.52	0.46	0.42	0.37	0.34	0.30	0.27	0.25	0.23	0.21
	3. L/200	3.51	2.76	2.21	1.81	1.48	1.24	1.04	0.89	0.75	0.65	0.57	0.49	0.44	0.39	0.34	0.31	0.28	0.26	0.23	0.21	0.19	0.17	0.15
1.00	1. SGN	3.84	3.26	2.79	2.42	2.11	1.85	1.65	1.47	1.32	1.19	1.08	0.98	0.90	0.82	0.76	0.70	0.65	0.60	0.56	0.52	0.49	0.45	0.42
	2. L/150	5.53	4.35	3.48	2.83	2.34	1.95	1.64	1.39	1.20	1.03	0.90	0.78	0.69	0.61	0.55	0.49	0.44	0.39	0.35	0.32	0.29	0.27	0.24
	3. L/200	4.15	3.26	2.61	2.13	1.75	1.46	1.23	1.05	0.90	0.77	0.67	0.58	0.52	0.46	0.41	0.36	0.33	0.29	0.27	0.24	0.22	0.20	0.18

1-span structure – Suction

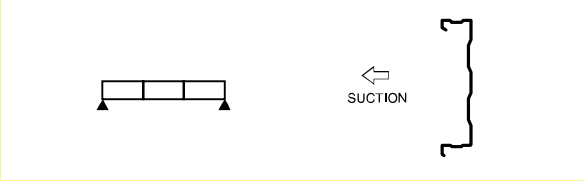

Thickness (mm)	State	Span length L in [m]																						
		3.00	3.25	3.50	3.75	4.00	4.25	4.50	4.75	5.00	5.25	5.50	5.75	6.00	6.25	6.50	6.75	7.00	7.25	7.50	7.75	8.00	8.25	8.50
		Admissible continuous uniform load [kN/m²] with span length L in [m]																						
0.75	1. SGN	2.92	2.49	2.14	1.87	1.64	1.46	1.30	1.16	1.05	0.96	0.87	0.80	0.74	0.67	0.63	0.58	0.54	0.50	0.47	0.44	0.41	0.39	0.36
	2. L/150	2.61	2.05	1.64	1.33	1.09	0.92	0.77	0.65	0.56	0.48	0.43	0.38	0.33	0.29	0.26	0.23	0.21	0.19	0.17	0.14	0.13	0.13	0.12
	3. L/200	1.95	1.54	1.23	1.00	0.82	0.68	0.58	0.49	0.42	0.37	0.32	0.28	0.24	0.22	0.19	0.17	0.16	0.14	0.13	0.11	0.10	0.09	0.08
0.88	1. SGN	3.56	3.03	2.62	2.28	2.00	1.77	1.58	1.42	1.28	1.16	1.06	0.96	0.89	0.82	0.76	0.70	0.65	0.61	0.57	0.53	0.50	0.47	0.44
	2. L/150	3.35	2.63	2.11	1.72	1.41	1.18	0.99	0.85	0.72	0.62	0.55	0.48	0.42	0.37	0.33	0.29	0.26	0.24	0.21	0.19	0.18	0.16	0.15
	3. L/200	2.52	1.97	1.58	1.29	1.06	0.88	0.74	0.63	0.54	0.47	0.41	0.36	0.31	0.28	0.25	0.22	0.20	0.18	0.16	0.14	0.13	0.12	0.11
1.00	1. SGN	4.16	3.54	3.05	2.66	2.34	2.08	1.85	1.66	1.50	1.36	1.24	1.13	1.04	0.96	0.89	0.82	0.76	0.71	0.67	0.62	0.58	0.55	0.51
	2. L/150	4.11	3.23	2.59	2.10	1.74	1.45	1.22	1.04	0.89	0.77	0.67	0.59	0.51	0.45	0.40	0.36	0.32	0.29	0.26	0.24	0.22	0.20	0.18
	3. L/200	3.09	2.43	1.94	1.58	1.30	1.08	0.91	0.78	0.67	0.57	0.50	0.44	0.39	0.34	0.31	0.27	0.24	0.22	0.20	0.18	0.16	0.15	0.13

Calculations according to ENV 1993-1-3.

Continuous uniform load in [kN/m²].

Compare design load with values in tables (1.SGN).

For serviceability limit state characteristic values were adopted.

Compare characteristic load with values in tables (2;3. SGU).

1. Load limit state (SGN; Q).

2. Serviceability limit state. Deflection limit f = L/150 (SGU; Q_{ch}).

3. Serviceability limit state. Deflection limit f = L/200 (SGU; Q_{ch}).

Ruukki LT125-600SB

Effective width [mm]	Depth [mm]	Support width End supports [mm]
600	125	50

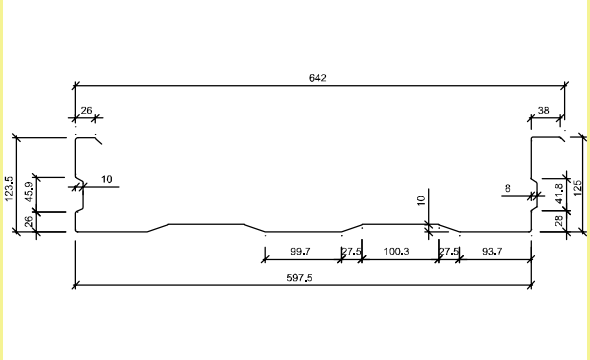

L.p.	Thickness nominal	Thickness core	Weight	Limit yield point	Tensile strength	Effective moment of inertia. Narrow flange compressed	Effective moment of inertia. Wide flange compressed	Effective sectional modulus. Narrow flange compressed	Effective sectional modulus. Wide flange compressed	Max. bending moment in span. Narrow flange compressed	Max. bending moment in span. Wide flange compressed
A	t_{nom}	t_{core}	g	f_y	f_u	$I_{r,a}$	$I_{r,i}$	$W_{r,a}$	$W_{r,i}$	$M_{r,a}$	$M_{r,i}$
B	mm	mm	kg/m²	MPa	MPa	cm⁴/m	cm⁴/m	cm³/m	cm³/m	kNm/m	kNm/m
1.	0.75	0.71	9.28	320.0	390.0	146.438	106.967	12.266	17.078	3.14	4.37
2.	0.88	0.84	10.88	320.0	390.0	186.256	139.203	16.059	20.852	4.11	5.34
3.	1.00	0.96	12.36	320.0	390.0	224.356	169.300	20.566	24.367	5.27	6.24

1-span structure – Pressure

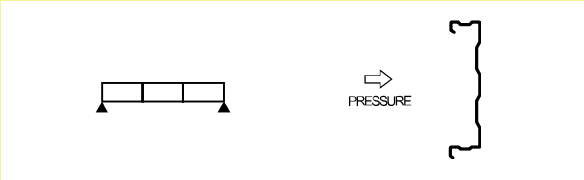

Thickness [mm]	State	Span length L in [m]																						
		4.00	4.25	4.50	4.75	5.00	5.25	5.50	5.75	6.00	6.25	6.50	6.75	7.00	7.25	7.50	7.75	8.00	8.25	8.50	8.75	9.00	9.25	9.50
		Admissible continuous uniform load [kN/m²] with span length L in [m]																						
0.75	1. SGN	1.66	1.45	1.29	1.15	1.04	0.94	0.85	0.78	0.71	0.65	0.60	0.55	0.51	0.48	0.44	0.41	0.39	0.37	0.35	0.33	0.31	0.29	0.28
	2. L/150	2.49	2.07	1.74	1.49	1.27	1.10	0.96	0.84	0.74	0.65	0.58	0.51	0.46	0.42	0.38	0.34	0.31	0.28	0.25	0.24	0.22	0.20	0.19
	3. L/200	1.86	1.55	1.31	1.11	0.95	0.82	0.72	0.63	0.55	0.49	0.44	0.39	0.35	0.32	0.29	0.26	0.23	0.21	0.20	0.18	0.16	0.15	0.14
0.88	1. SGN	2.22	1.95	1.72	1.54	1.38	1.24	1.12	1.03	0.93	0.85	0.78	0.72	0.67	0.62	0.58	0.54	0.50	0.47	0.44	0.41	0.39	0.37	0.35
	2. L/150	3.16	2.64	2.22	1.88	1.61	1.40	1.21	1.06	0.93	0.83	0.74	0.65	0.60	0.54	0.48	0.43	0.39	0.36	0.33	0.30	0.28	0.26	0.24
	3. L/200	2.37	1.98	1.66	1.42	1.21	1.05	0.91	0.80	0.70	0.62	0.55	0.49	0.44	0.40	0.36	0.33	0.29	0.27	0.25	0.23	0.21	0.20	0.18
1.00	1. SGN	2.78	2.45	2.18	1.94	1.75	1.57	1.42	1.30	1.18	1.09	1.00	0.92	0.85	0.79	0.73	0.69	0.64	0.60	0.56	0.53	0.49	0.46	0.44
	2. L/150	3.81	3.17	2.67	2.27	1.95	1.68	1.47	1.28	1.13	1.00	0.88	0.79	0.71	0.64	0.58	0.52	0.48	0.44	0.40	0.37	0.33	0.31	0.29
	3. L/200	2.85	2.39	2.01	1.70	1.46	1.27	1.10	0.96	0.85	0.75	0.67	0.59	0.54	0.48	0.43	0.39	0.36	0.32	0.30	0.27	0.25	0.23	0.21

1-span structure – Suction

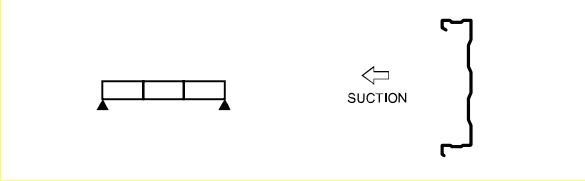

Thickness [mm]	State	Span length L in [m]																						
		4.00	4.25	4.50	4.75	5.00	5.25	5.50	5.75	6.00	6.25	6.50	6.75	7.00	7.25	7.50	7.75	8.00	8.25	8.50	8.75	9.00	9.25	9.50
		Admissible continuous uniform load [kN/m²] with span length L in [m]																						
0.75	1. SGN	2.21	1.96	1.74	1.57	1.41	1.28	1.17	1.07	0.98	0.90	0.83	0.77	0.72	0.68	0.63	0.59	0.55	0.52	0.49	0.46	0.44	0.41	0.39
	2. L/150	1.82	1.52	1.28	1.08	0.93	0.80	0.70	0.61	0.53	0.47	0.43	0.38	0.34	0.30	0.28	0.25	0.22	0.21	0.19	0.18	0.16	0.14	0.13
	3. L/200	1.36	1.13	0.96	0.81	0.69	0.61	0.52	0.46	0.40	0.36	0.32	0.28	0.25	0.23	0.21	0.19	0.17	0.15	0.14	0.13	0.12	0.11	0.10
0.88	1. SGN	2.70	2.39	2.13	1.91	1.73	1.56	1.42	1.30	1.20	1.10	1.02	0.95	0.88	0.82	0.77	0.72	0.67	0.63	0.60	0.56	0.53	0.50	0.48
	2. L/150	2.36	1.97	1.66	1.41	1.21	1.05	0.91	0.80	0.70	0.62	0.55	0.49	0.44	0.40	0.36	0.32	0.29	0.27	0.24	0.22	0.21	0.19	0.18
	3. L/200	1.77	1.48	1.24	1.06	0.90	0.78	0.69	0.60	0.53	0.47	0.42	0.37	0.33	0.30	0.27	0.25	0.22	0.20	0.18	0.16	0.15	0.14	0.13
1.00	1. SGN	3.15	2.79	2.49	2.24	2.01	1.83	1.67	1.53	1.40	1.29	1.20	1.11	1.03	0.96	0.90	0.83	0.79	0.74	0.70	0.66	0.62	0.59	0.55
	2. L/150	2.87	2.40	2.02	1.72	1.48	1.27	1.11	0.97	0.85	0.75	0.67	0.60	0.53	0.48	0.44	0.40	0.35	0.33	0.30	0.27	0.25	0.23	0.21
	3. L/200	2.15	1.80	1.51	1.29	1.10	0.95	0.83	0.73	0.64	0.57	0.51	0.45	0.40	0.36	0.33	0.30	0.27	0.24	0.22	0.20	0.19	0.17	0.16

Calculations according to ENV 1993-1-3.

Continuous uniform load in [kN/m²].

Compare design load with values in tables (1.SGN).

For serviceability limit state characteristic values were adopted.

Compare characteristic load with values in tables (2;3. SGU).

1. Load limit state (SGN; Q).

2. Serviceability limit state. Deflection limit f = L/150 (SGU; Q_{ch}).

3. Serviceability limit state. Deflection limit f = L/200 (SGU; Q_{ch}).

Ruukki LT150-600SB

Effective width [mm]	Depth [mm]	Support width End supports [mm]
600	150	50

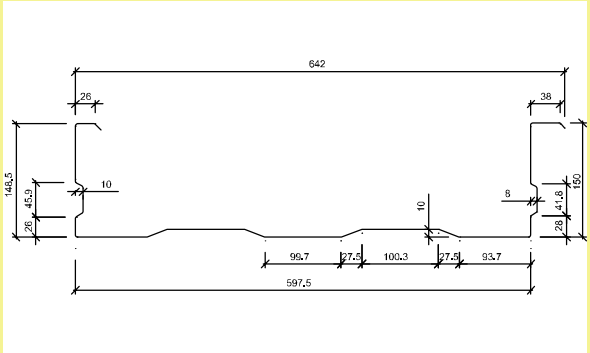

L.p.	Thickness nominal	Thickness core	Weight	Limit yield point	Tensile strength	Effective moment of inertia. Narrow flange compressed	Effective moment of inertia. Wide flange compressed	Effective sectional modulus. Narrow flange compressed	Effective sectional modulus. Wide flange compressed	Max. bending moment in span. Narrow flange compressed	Max. bending moment in span. Wide flange compressed
A	t_{nom}	t_{core}	g	f_y	f_u	$I_{r,a}$	$I_{r,i}$	$W_{r,a}$	$W_{r,i}$	$M_{r,a}$	$M_{r,i}$
B	mm	mm	kg/m²	MPa	MPa	cm⁴/m	cm⁴/m	cm³/m	cm³/m	kNm/m	kNm/m
1.	0.75	0.71	9.77	320.0	390.0	204.296	161.812	14.176	21.313	3.63	5.46
2.	0.88	0.84	11.46	320.0	390.0	262.904	208.882	20.379	26.746	5.22	6.85
3.	1.00	0.96	13.01	320.0	390.0	320.130	257.468	25.781	31.371	6.60	8.03

1-span structure – Pressure

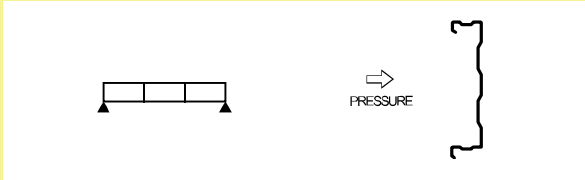

Thickness [mm]	State	Span length L in [m]																						
		5.00	5.25	5.50	5.75	6.00	6.25	6.50	6.75	7.00	7.25	7.50	7.75	8.00	8.25	8.50	8.75	9.00	9.25	9.50	9.75	10.00	10.25	10.50
		Admissible continuous uniform load [kN/m²] with span length L in [m]																						
0.75	1. SGN	1.20	1.09	0.99	0.90	0.82	0.75	0.69	0.63	0.59	0.55	0.51	0.47	0.44	0.41	0.39	0.36	0.34	0.32	0.31	0.29	0.28	0.26	0.25
	2. L/150	1.77	1.53	1.34	1.17	1.03	0.91	0.81	0.72	0.65	0.58	0.53	0.48	0.43	0.39	0.36	0.33	0.31	0.28	0.26	0.24	0.22	0.21	0.19
	3. L/200	1.33	1.15	1.00	0.88	0.77	0.68	0.60	0.55	0.48	0.44	0.39	0.36	0.32	0.30	0.27	0.25	0.23	0.21	0.20	0.18	0.17	0.15	0.14
0.88	1. SGN	1.69	1.53	1.39	1.26	1.15	1.05	0.97	0.89	0.82	0.76	0.71	0.66	0.61	0.57	0.53	0.50	0.47	0.44	0.41	0.39	0.37	0.35	0.33
	2. L/150	2.28	1.98	1.71	1.50	1.32	1.17	1.04	0.93	0.83	0.75	0.67	0.61	0.56	0.51	0.47	0.43	0.40	0.37	0.33	0.31	0.28	0.27	0.25
	3. L/200	1.71	1.48	1.29	1.13	0.99	0.88	0.78	0.69	0.62	0.56	0.51	0.46	0.41	0.38	0.35	0.32	0.29	0.27	0.25	0.23	0.21	0.20	0.19
1.00	1. SGN	2.17	1.96	1.78	1.62	1.49	1.36	1.25	1.16	1.07	0.99	0.92	0.86	0.80	0.75	0.70	0.66	0.63	0.58	0.56	0.52	0.49	0.46	0.44
	2. L/150	2.78	2.40	2.09	1.83	1.61	1.42	1.26	1.13	1.01	0.91	0.83	0.75	0.68	0.62	0.57	0.52	0.48	0.45	0.41	0.38	0.35	0.33	0.30
	3. L/200	2.08	1.81	1.57	1.37	1.21	1.07	0.95	0.85	0.75	0.68	0.62	0.56	0.51	0.46	0.42	0.39	0.36	0.33	0.30	0.28	0.26	0.24	0.23

1-span structure – Suction

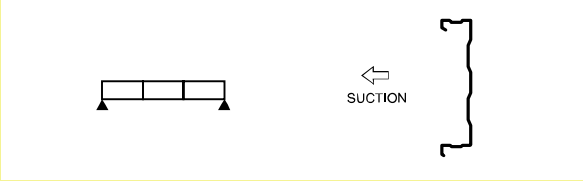

Thickness [mm]	State	Span length L in [m]																						
		5.00	5.25	5.50	5.75	6.00	6.25	6.50	6.75	7.00	7.25	7.50	7.75	8.00	8.25	8.50	8.75	9.00	9.25	9.50	9.75	10.00	10.25	10.50
		Admissible continuous uniform load [kN/m²] with span length L in [m]																						
0.75	1. SGN	1.77	1.60	1.46	1.33	1.23	1.13	1.04	0.97	0.90	0.84	0.79	0.73	0.69	0.65	0.61	0.58	0.54	0.52	0.49	0.46	0.44	0.42	0.40
	2. L/150	1.40	1.21	1.06	0.92	0.81	0.72	0.64	0.57	0.51	0.47	0.42	0.38	0.34	0.31	0.29	0.26	0.24	0.22	0.21	0.19	0.18	0.16	0.15
	3. L/200	1.06	0.91	0.79	0.69	0.60	0.53	0.48	0.42	0.39	0.35	0.31	0.28	0.26	0.24	0.21	0.20	0.18	0.16	0.15	0.14	0.13	0.12	0.11
0.88	1. SGN	2.22	2.01	1.83	1.67	1.53	1.41	1.31	1.21	1.13	1.05	0.98	0.92	0.86	0.81	0.76	0.72	0.68	0.65	0.61	0.58	0.55	0.53	0.50
	2. L/150	1.81	1.57	1.37	1.19	1.05	0.93	0.83	0.74	0.66	0.59	0.54	0.49	0.44	0.41	0.36	0.34	0.31	0.28	0.26	0.25	0.23	0.21	0.19
	3. L/200	1.36	1.17	1.02	0.89	0.79	0.70	0.62	0.56	0.49	0.45	0.40	0.36	0.34	0.30	0.28	0.25	0.23	0.21	0.20	0.18	0.16	0.15	0.14
1.00	1. SGN	2.60	2.35	2.14	1.96	1.80	1.66	1.53	1.43	1.33	1.24	1.16	1.08	1.02	0.95	0.90	0.85	0.80	0.75	0.71	0.68	0.65	0.61	0.58
	2. L/150	2.24	1.94	1.68	1.47	1.30	1.15	1.02	0.91	0.82	0.73	0.66	0.60	0.54	0.50	0.45	0.41	0.38	0.35	0.33	0.30	0.28	0.26	0.24
	3. L/200	1.68	1.45	1.26	1.10	0.97	0.86	0.76	0.69	0.61	0.55	0.50	0.45	0.41	0.37	0.34	0.32	0.29	0.27	0.24	0.22	0.21	0.19	0.18

Calculations according to ENV 1993-1-3.

Continuous uniform load in [kN/m²].

Compare design load with values in tables (1.SGN).

For serviceability limit state characteristic values were adopted.

Compare characteristic load with values in tables (2;3. SGU).

1. Load limit state (SGN; Q).

2. Serviceability limit state. Deflection limit f = L/150 (SGU; Q_{ch}).

3. Serviceability limit state. Deflection limit f = L/200 (SGU; Q_{ch}).

- **LT-01-01**
  Ruukki LT100-600S. Section.

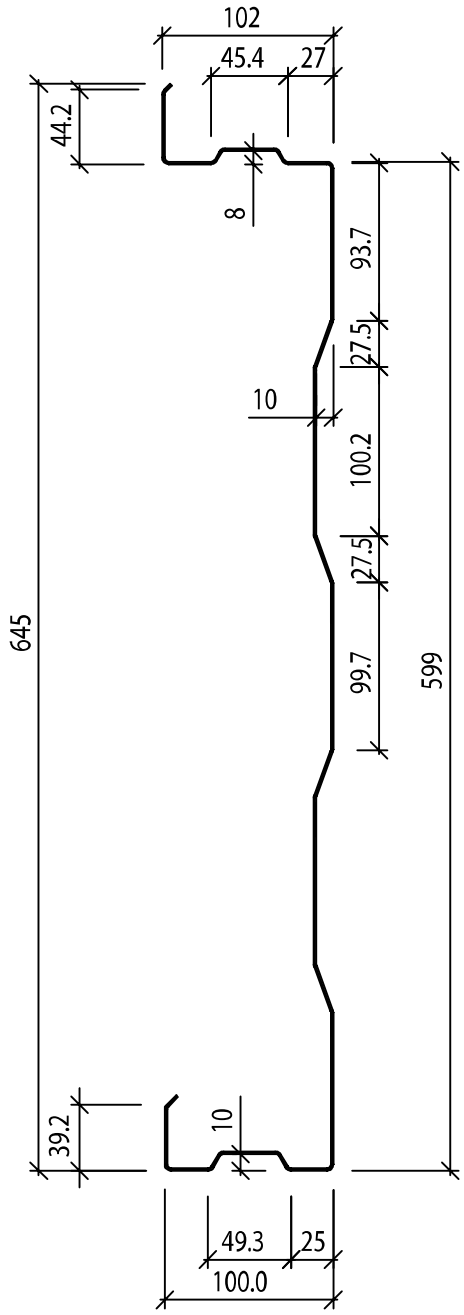

- **LT-01-02**
  Ruukki LT125-600S. Section.

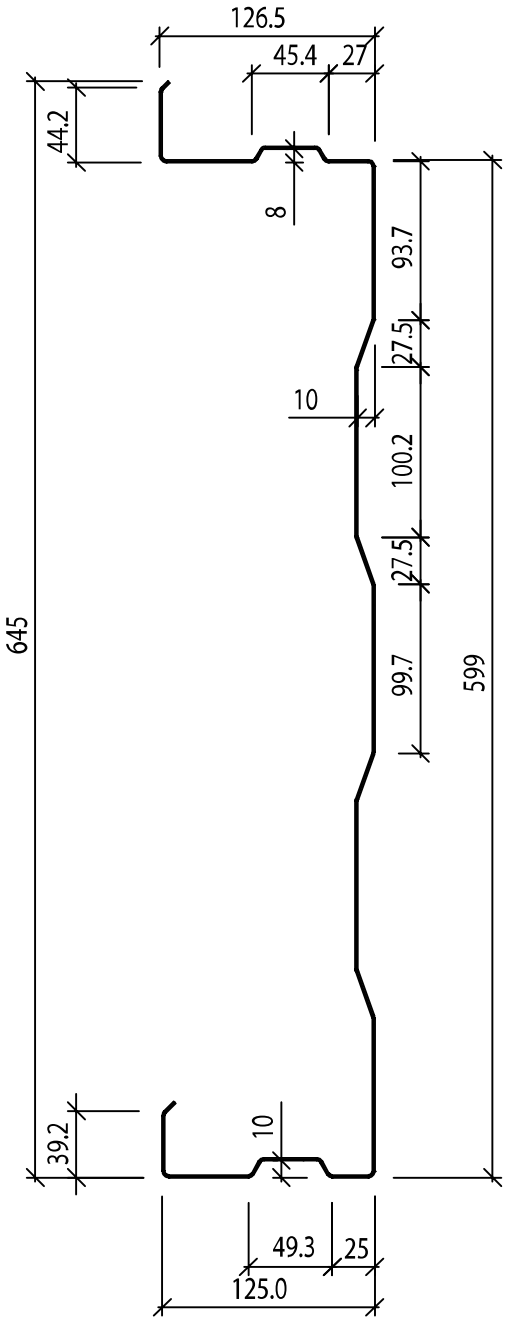

- **LT-01-03**
  Ruukki LT150-600S. Section.

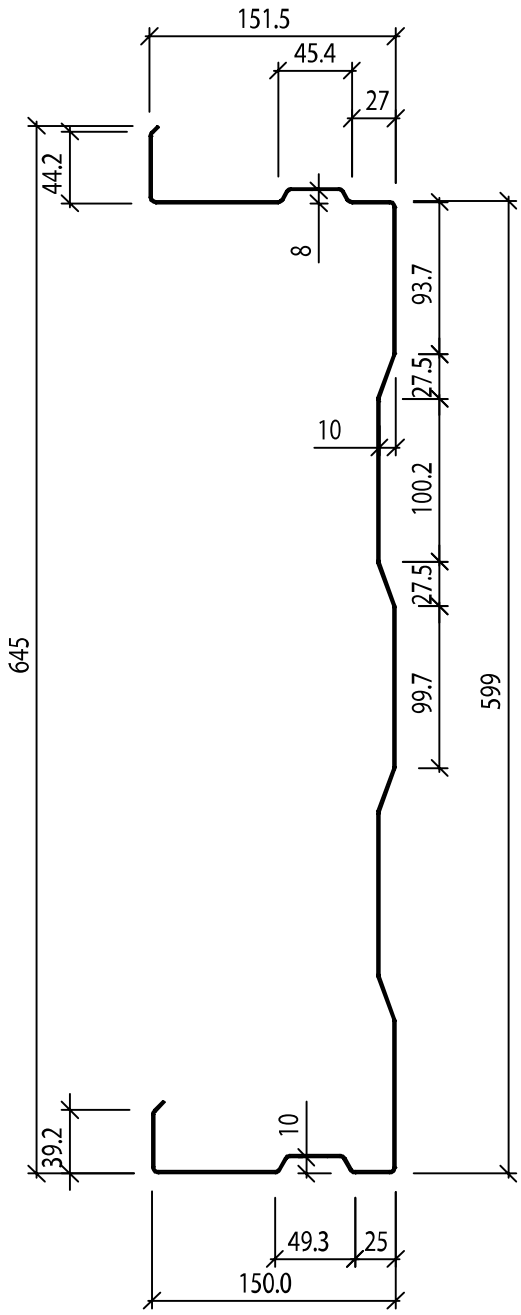

- **LT-01-04**
  Ruukki LT200-600S. Section.

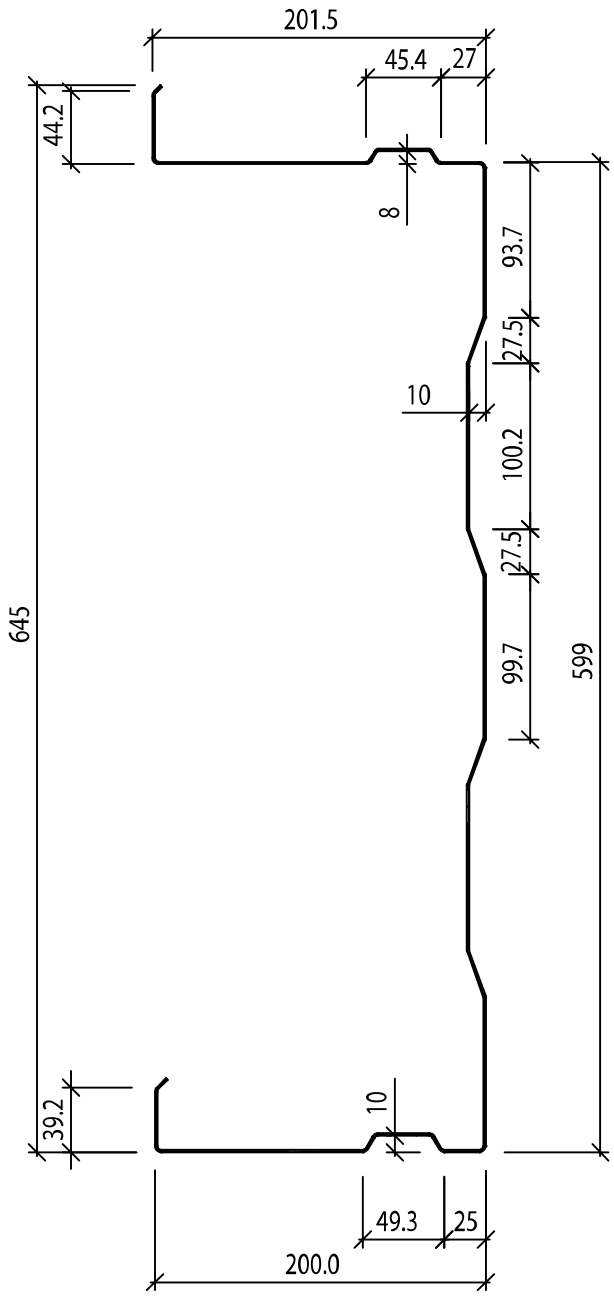

- **LT-01-05**
  Ruukki LT100-600SB. Section.

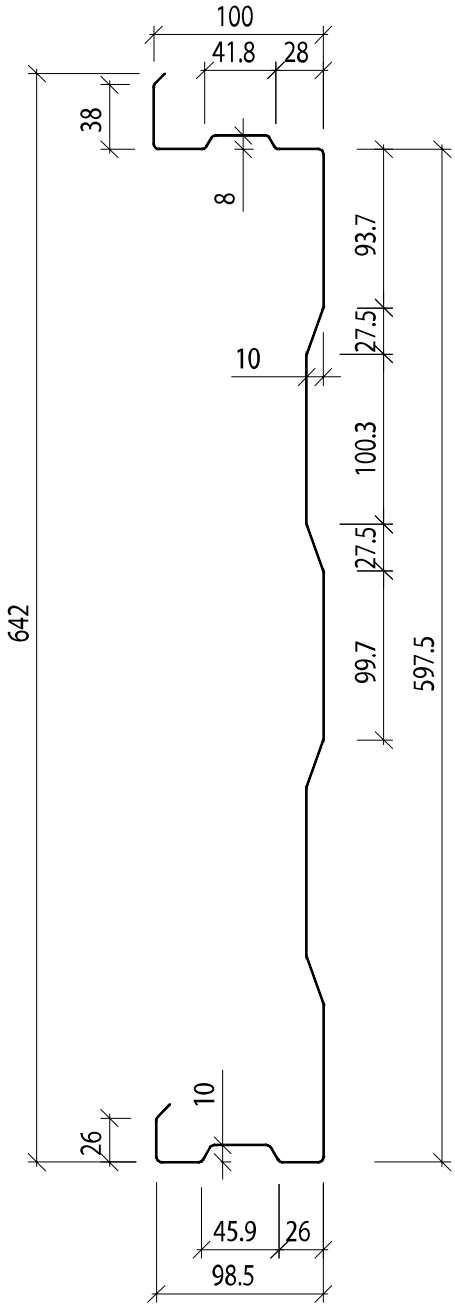

- **LT-01-06**
  Ruukki LT125-600SB. Section.

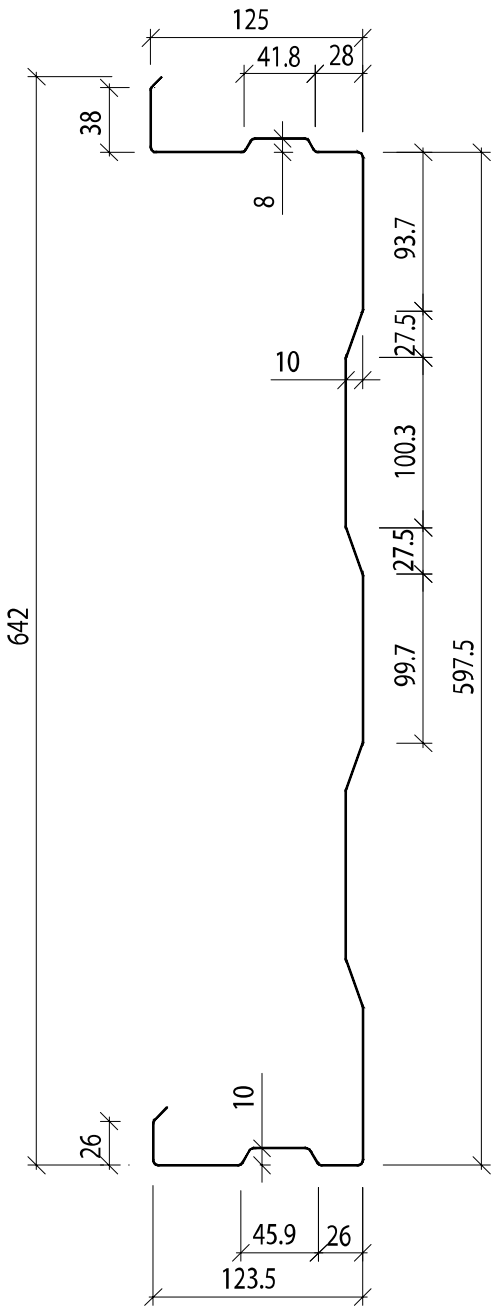

- **LT-01-07**
  Ruukki LT150-600SB. Section.

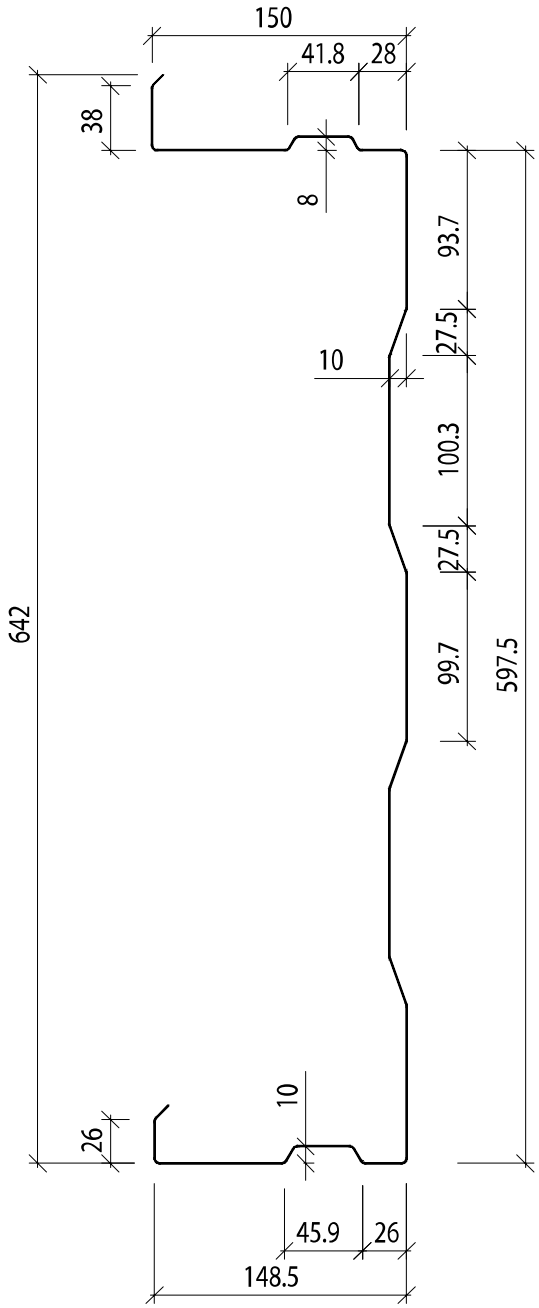

- **LT-01-08**
  Starting liner trays. Sections.

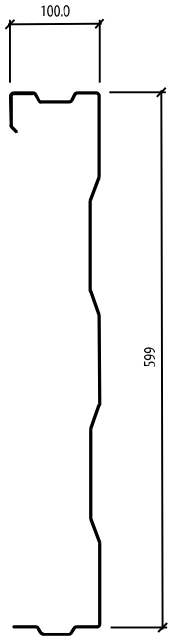

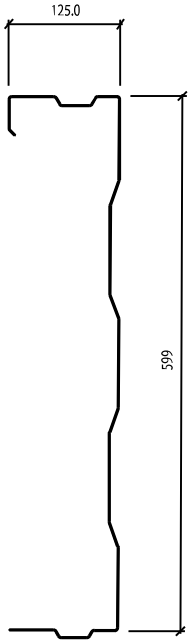

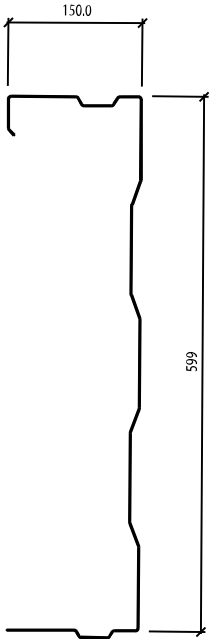

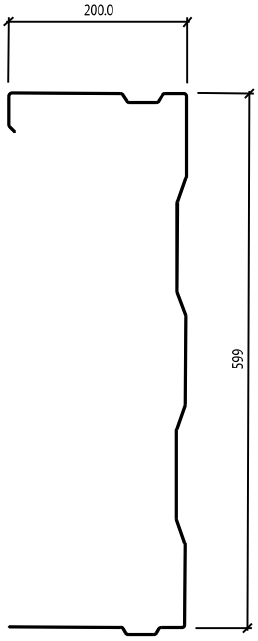

- **LT-02-01**
  Liner tray
  Assembly details – 1.

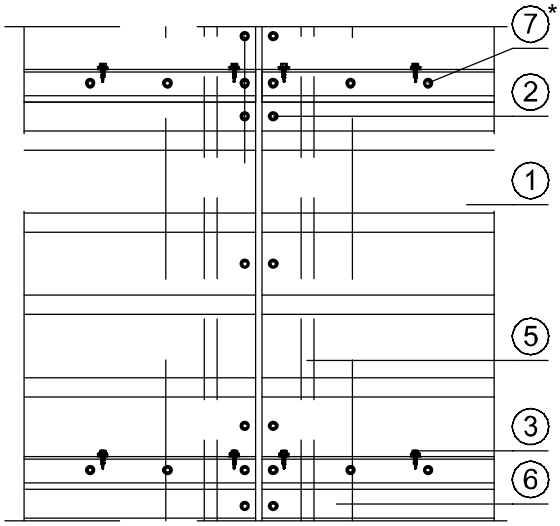

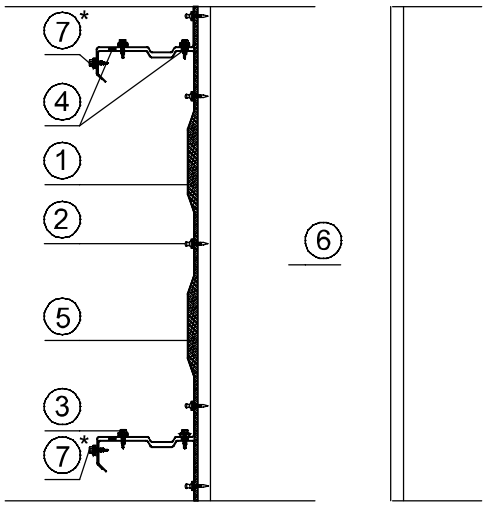

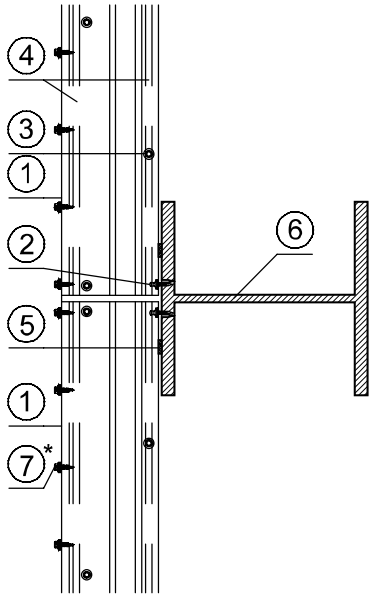

1. Liner tray
2. Shot nail.
3. Self-drilling fastener screwed in staggered arrangement every 500 mm at maximum.
4. Self-adhesive sealing tape PES 3x10 mm (recommended).
5. Self-adhesive sealing tape PUS 15x20 mm (recommended).
6. Column according to the structural design.
7. Self-drilling fastener in a narrow flange c/c max. 300 mm.

Notes:

* *– self-drilling fastener in a narrow flange c/c max 300 mm,*
– in every second wave of façade profile – vertical sheet arrangement,
– in other cases c/c max 300 mm.

- **LT-02-02**
  Liner tray.
  Assembly – vertical section.

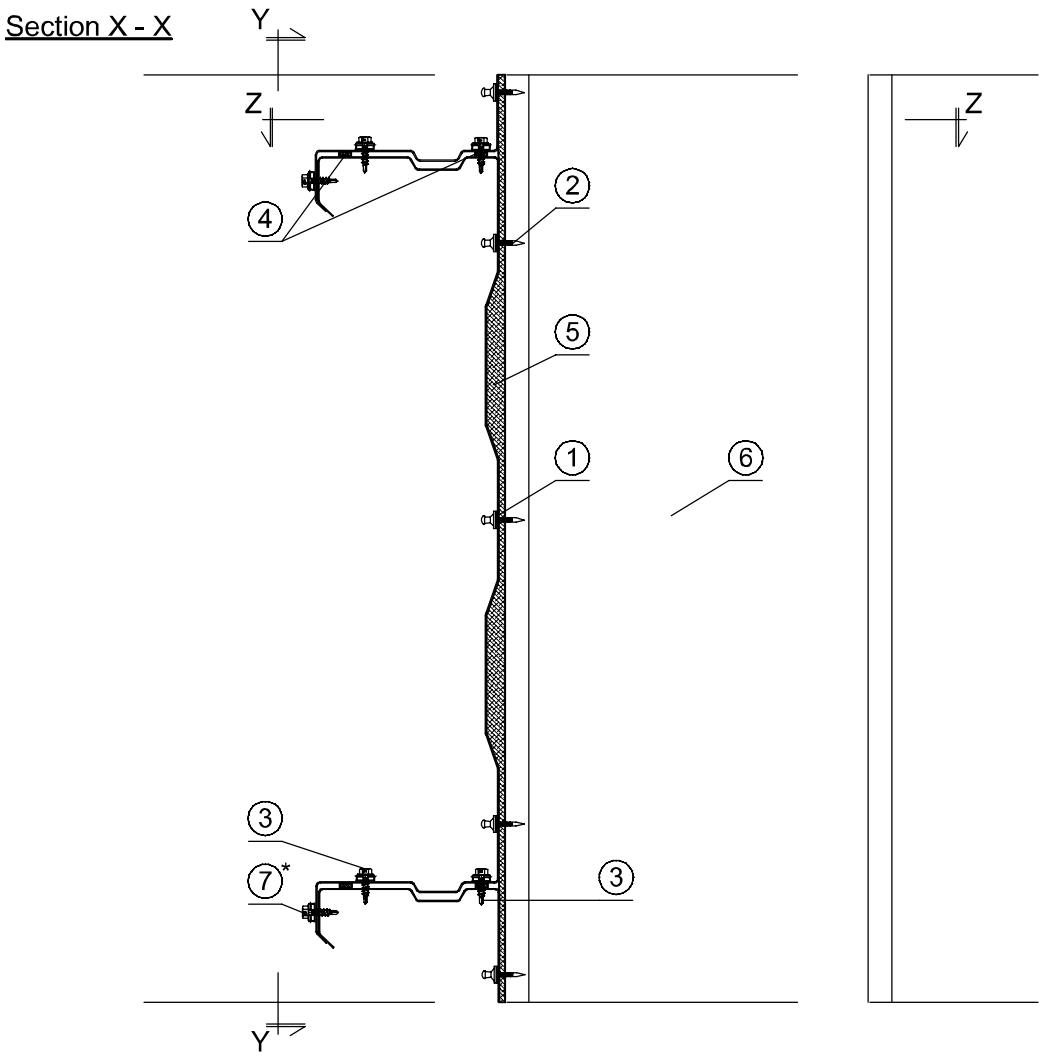

1. Liner tray.
2. Shot nail.
3. Self-drilling fastener screwed in staggered arrangement every 500 mm at maximum.
4. Self-adhesive sealing tape PES 3x10 mm (recommended).
5. Self-adhesive sealing tape PUS 15x20 mm (recommended).
6. Column according to the structural design.
7. Self-drilling fastener in a narrow flange c/c max. 300 mm.

Notes:

* *– self-drilling fastener in a narrow flange c/c max 300 mm,*
– in every second wave of façade profile – vertical sheet arrangement,
– in other cases c/c max 300 mm,
– view Y-Y, drawing No. LT-02-03,
– section Z-Z, drawing No. LT-02-04.

- **LT-02-03**
  Liner tray.
  Assembly – front view.

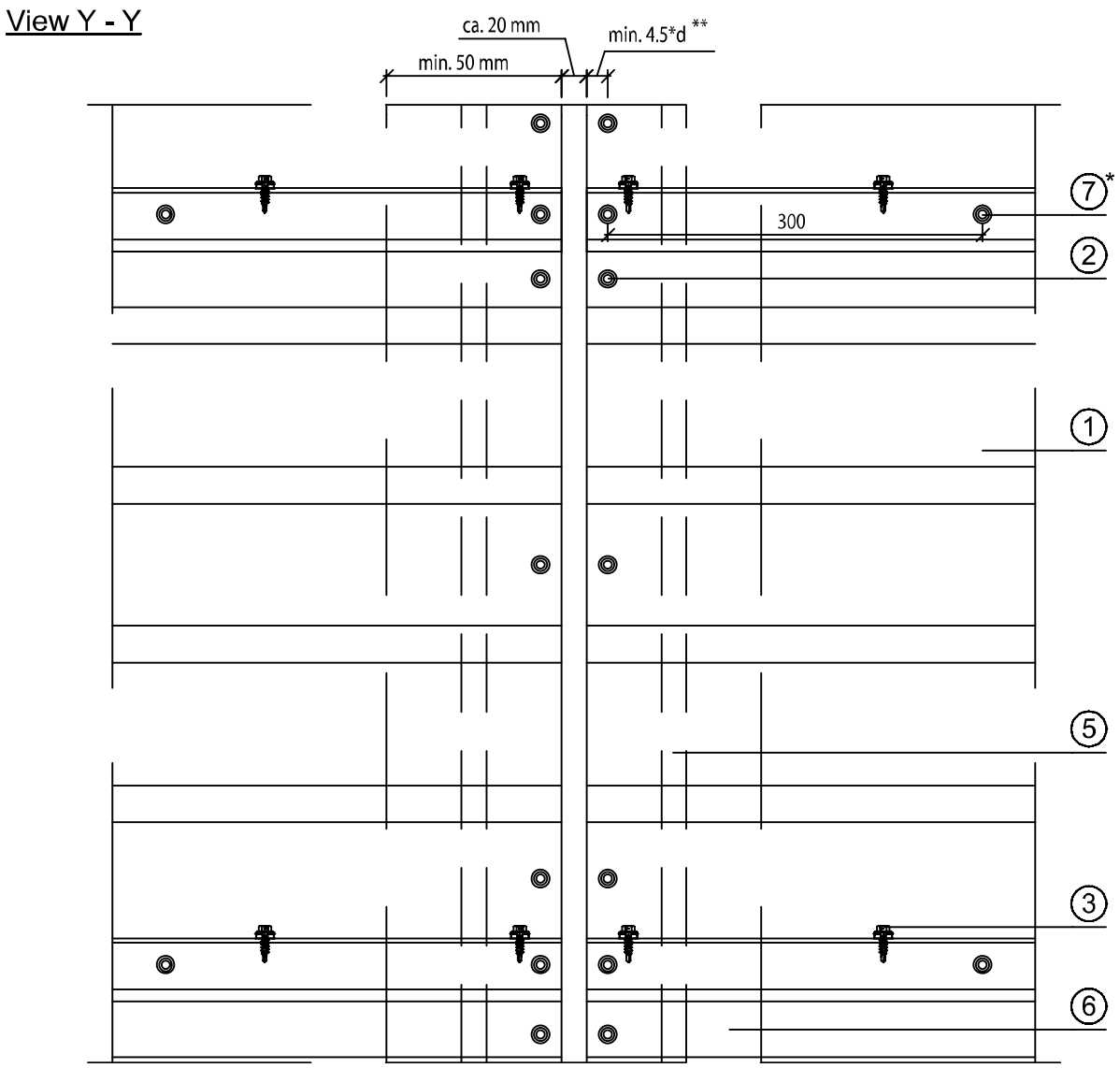

1. Liner tray.
2. Shot nail.
3. Self-drilling fastener screwed in staggered arrangement every 500 mm at maximum.
4. Self-adhesive sealing tape PES 3x10 mm (recommended).
5. Self-adhesive sealing tape PUS 15x20 mm (recommended).
6. Column according to the structural design.
7. Self-drilling fastener in a narrow flange c/c max. 300 mm.

Notes:

* *– self-drilling fastener in a narrow flange c/c max 300 mm,*
– in every second wave of façade profile – vertical sheet arrangement,
– in other cases c/c max 300 mm,

** *– d – shot pin diameter,*
– condition for self-drilling fastener = 3 x d.

- **LT-02-04**
  Liner tray.
  Assembly – horizontal section.

Section Z - Z

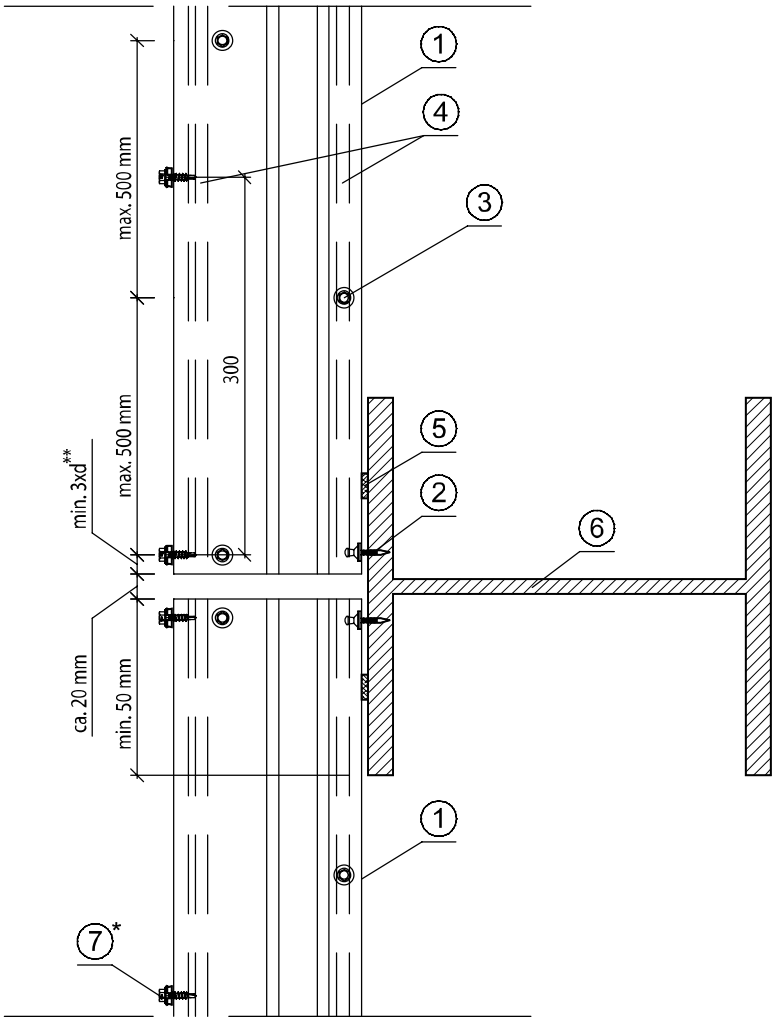

1. Liner tray.
2. Shot nail.
3. Self-drilling fastener screwed in staggered arrangement every 500 mm at maximum.
4. Self-adhesive sealing tape PES 3x10 mm (recommended).
5. Self-adhesive sealing tape PUS 15x20 mm (recommended).
6. Column according to the structural design.
7. Self-drilling fastener in a narrow flange c/c max. 300 mm.

Notes:

* *– self-drilling fastener in a narrow flange c/c max 300 mm,*
– in every second wave of façade profile – vertical sheet arrangement,
– in other cases c/c max 300 mm,

** *– d – pin diameter,*
– condition for self-drilling fastener = 3 x d.

- **LT-03-01**
  Liner tray.
  Overall view – details.

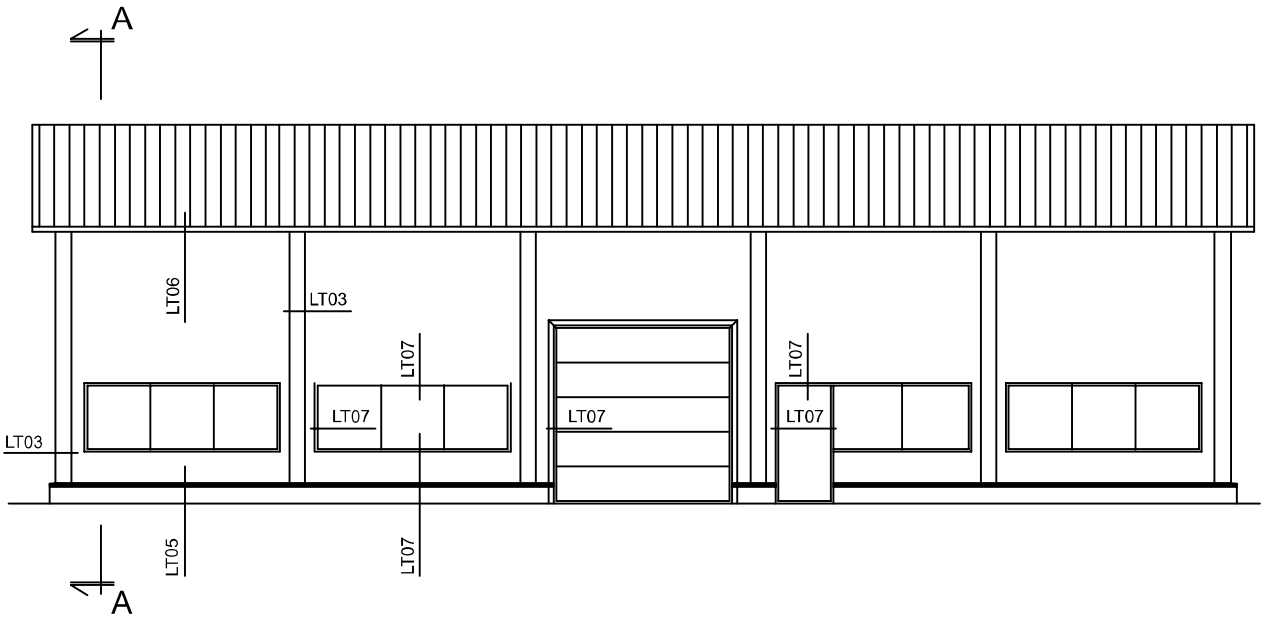

Section A - A

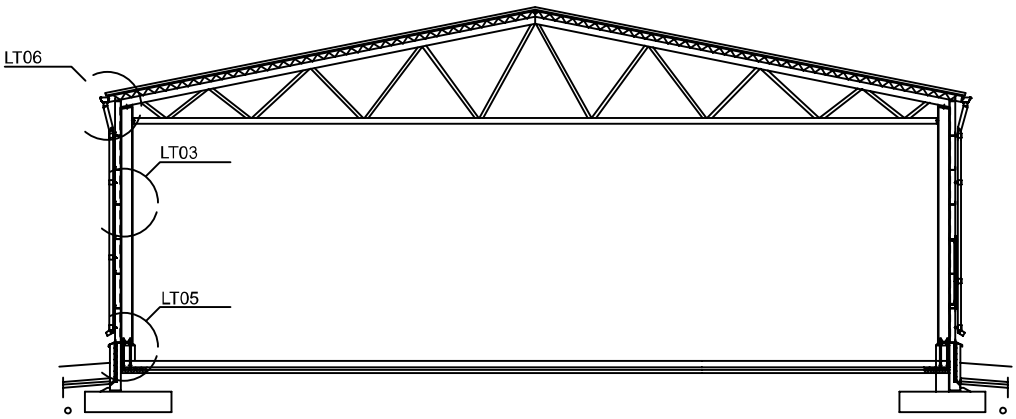

- **LT-03-02**
  Liner tray.
  Assembly – vertical section 1.

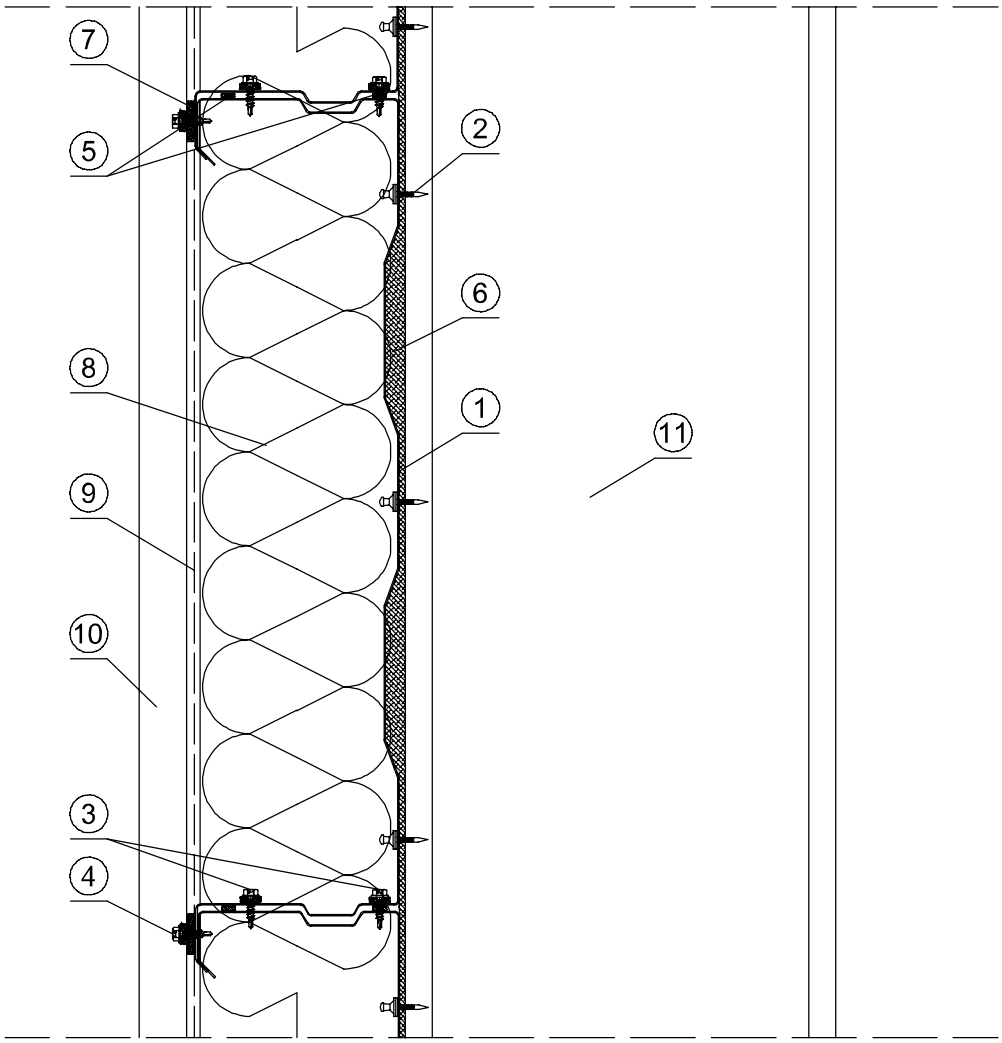

1. Liner tray.
2. Shot nail.
3. Self-drilling fastener screwed in staggered arrangement every 500 mm at maximum.
4. Self-drilling fastener in every second wave of facade profile.
5. Self-adhesive sealing tape PES 3x10 mm (recommended).
6. Self-adhesive sealing tape PUS 15x20 mm (recommended).
7. Mineral wool.
8. Insulation tape PES 5x30 (recommended)
9. Wind insulation.
10. Profiled sheet T35-119-1035 (for facades).
11. Column according to the structural design.

- **LT-03-03**
  Liner tray.
  Assembly – vertical section 2.

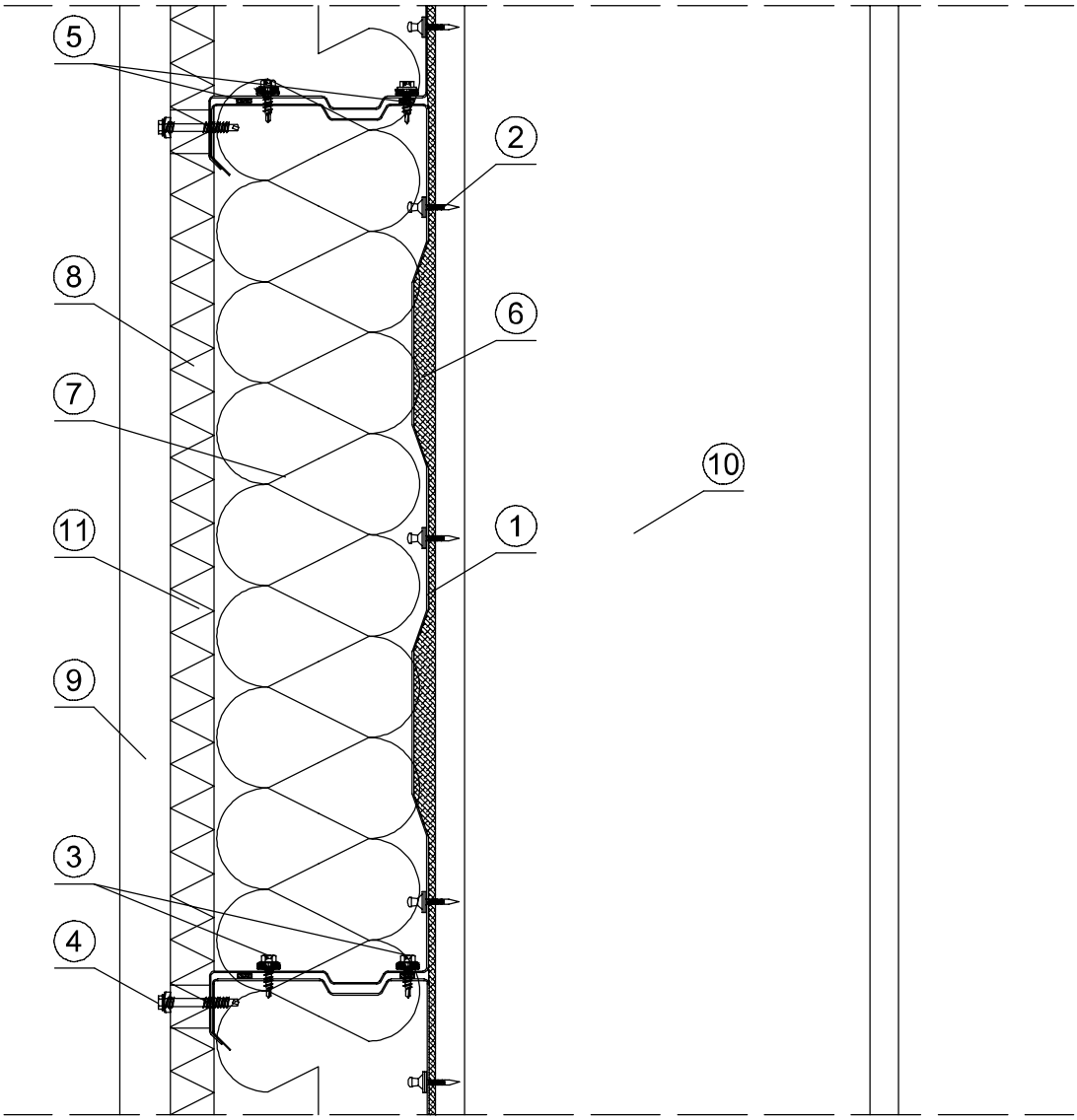

1. Liner tray.
2. Shot nail.
3. Self-drilling fastener screwed in staggered arrangement every 500 mm at maximum.
4. Self-drilling fastener in every second wave of facade profile.
5. Self-adhesive sealing tape PES 3x10 mm (recommended).
6. Self-adhesive sealing tape PUS 15x20 mm (recommended).
7. Mineral wool.
8. Wind board – mineral wool (min. density 90 kg/m^3).
9. Profiled sheet T35-119-1035 (for facades).
10. Column according to the structural design.

- **LT-03-04**
  Liner tray.
  Assembly – vertical section 3.

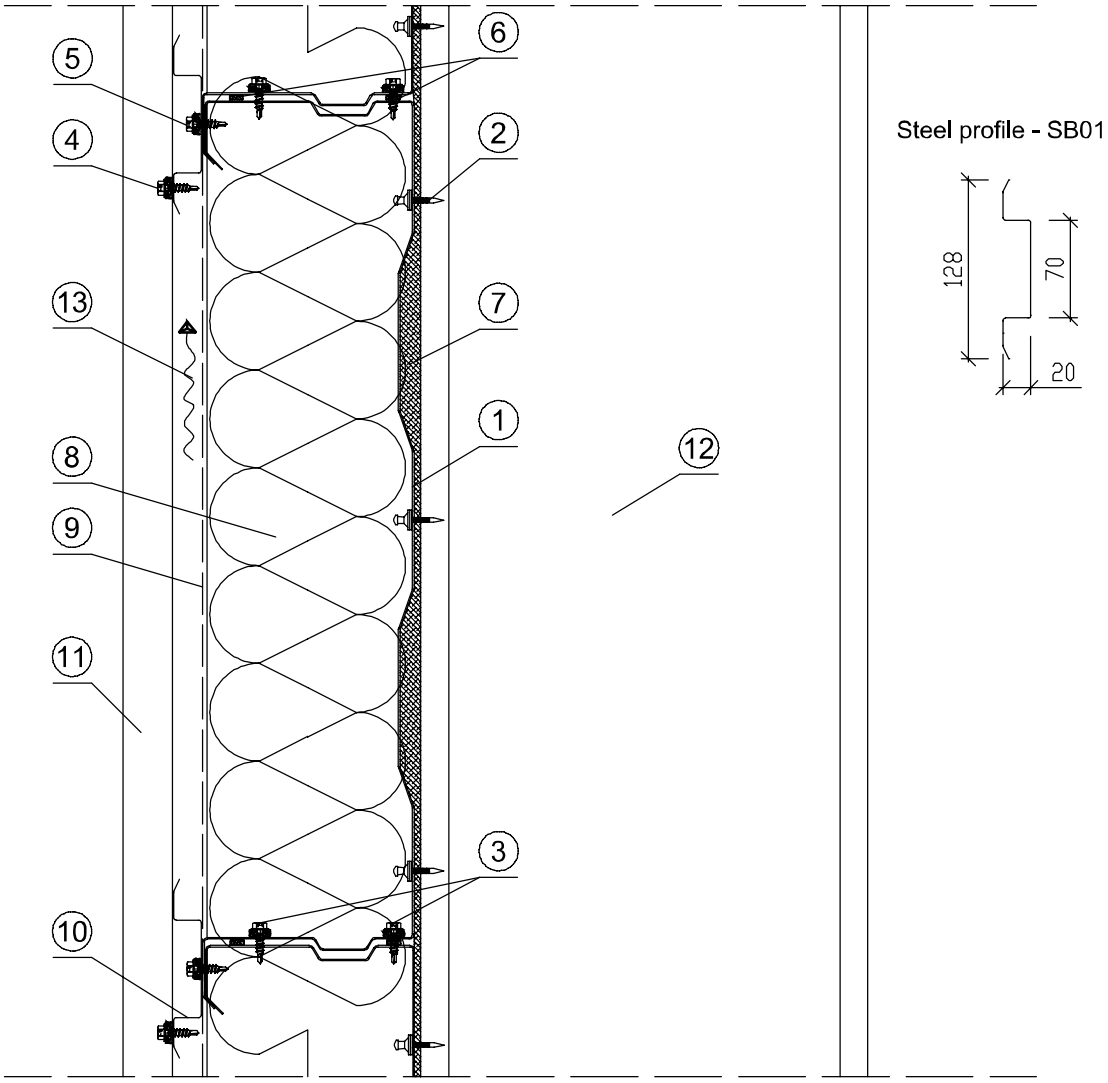

1. Liner tray.
2. Shot nail.
3. Self-drilling fastener screwed in staggered arrangement every 500 mm at maximum.
4. Self-drilling fastener in every second wave of facade profile.
5. Self-drilling fastener in a narrow flange c/c max. 300 mm.
6. Self-adhesive sealing tape PES 3x10 mm (recommended).
7. Self-adhesive sealing tape PUS 15x20 mm (recommended).
8. Mineral wool.
9. Wind insulation.
10. Steel profile SB01.
11. Profiled sheet T35-119-1035 (for facade).
12. Column according to the structural design.
13. Air-gap.

- **LT-03-05**
  Liner tray.
  Assembly – vertical section 4.

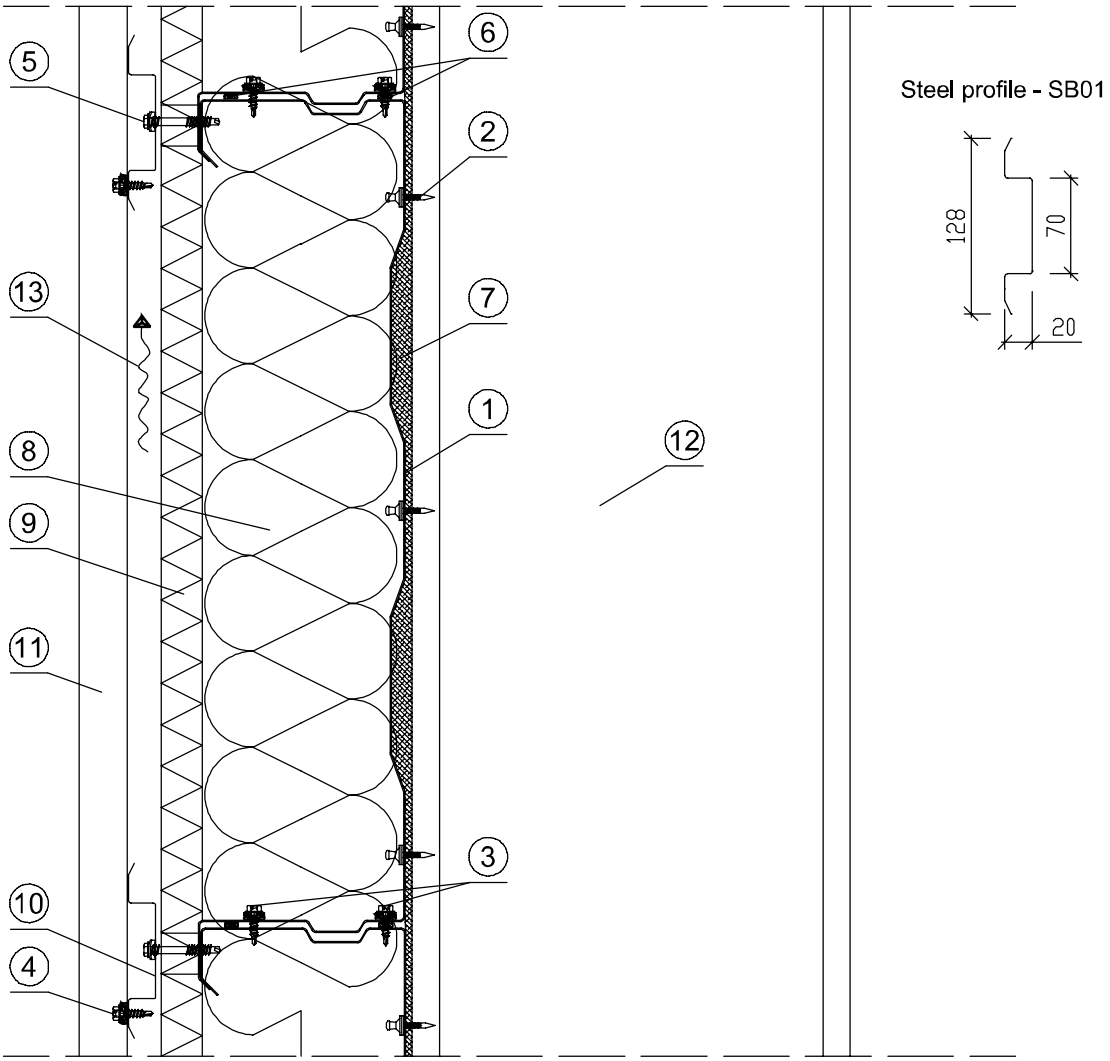

1. Liner tray.
2. Shot nail.
3. Self-drilling fastener screwed in staggered arrangement every 500 mm at maximum.
4. Self-drilling fastener in every second wave of facade profile.
5. Self-drilling fastener in a narrow flange c/c max. 300 mm.
6. Self-adhesive sealing tape PES 3x10 mm (recommended).
7. Self-adhesive sealing tape PUS 15x20 mm (recommended).
8. Mineral wool.
9. Wind board – mineral wool (min. density 90 kg/m^3).
10. Steel profile SB01.
11. Profiled sheet T35-119-1035 (for facade).
12. Column according to the structural design.
13. Air-gap.

- **LT-03-06**
  Liner tray.
  Assembly – vertical section 5.

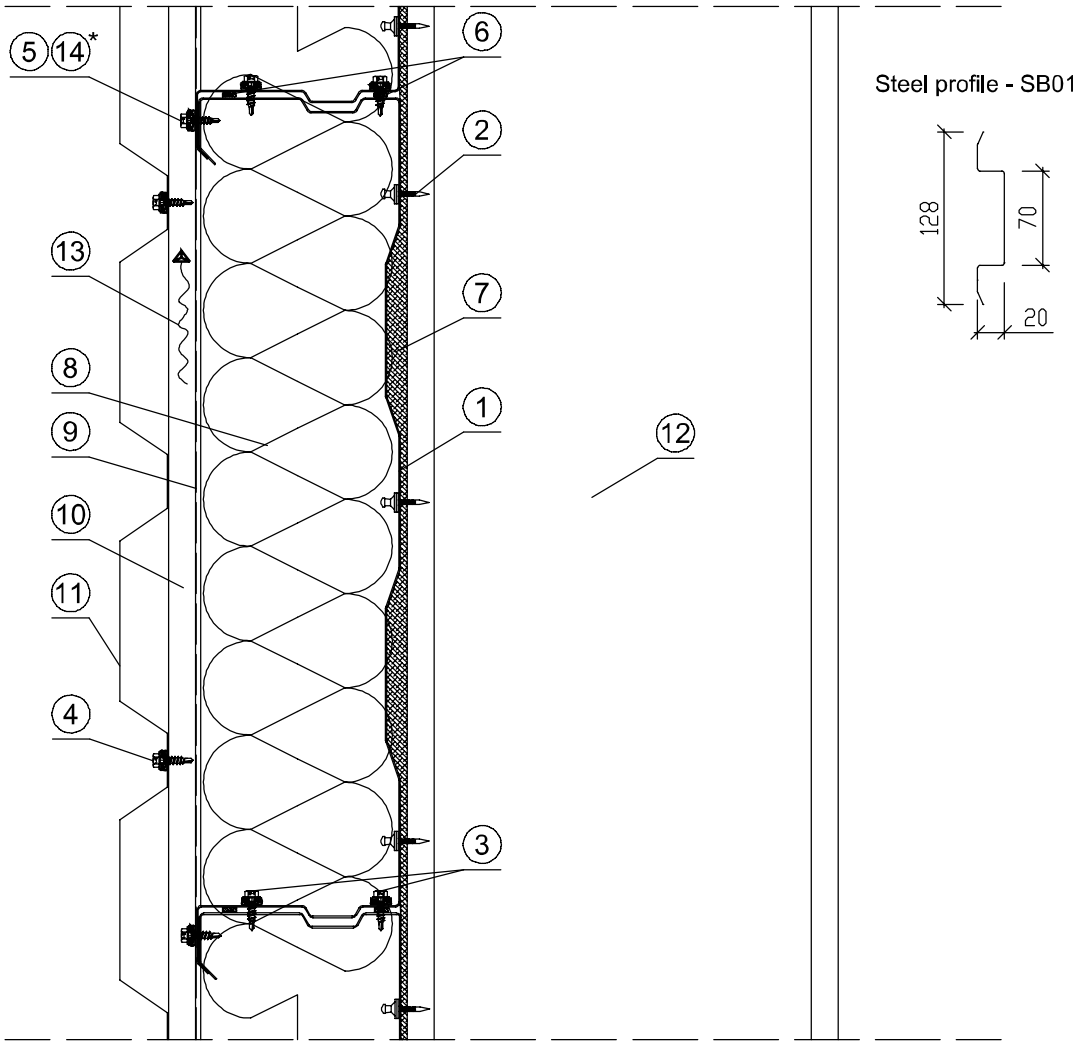

1. Liner tray.
2. Shot nail.
3. Self-drilling fastener screwed in staggered arrangement every 500 mm at maximum.
4. Self-drilling fastener in every second wave of facade profile.
5. Self-drilling fastener, 2 pcs. per SB01.
6. Self-adhesive sealing tape PES 3x10 mm (recommended).
7. Self-adhesive sealing tape PUS 15x20 mm (recommended).
8. Mineral wool.
9. Wind insulation.
10. Steel profile SB01 c/c 600 mm.
11. Profiled sheet T35-119-1035 (for facade).
12. Column according to the structural design.
13. Air-gap.
14. Self-drilling fastener in a narrow flange c/c max. 300 mm.

Notes:

* *– self-drilling fastener in a narrow flange c/c max 300 mm,*
– in every second wave of façade profile – vertical sheet arrangement,
– in other cases c/c max 300 mm.

- **LT-03-07**
  Liner tray.
  Assembly – vertical section 6.

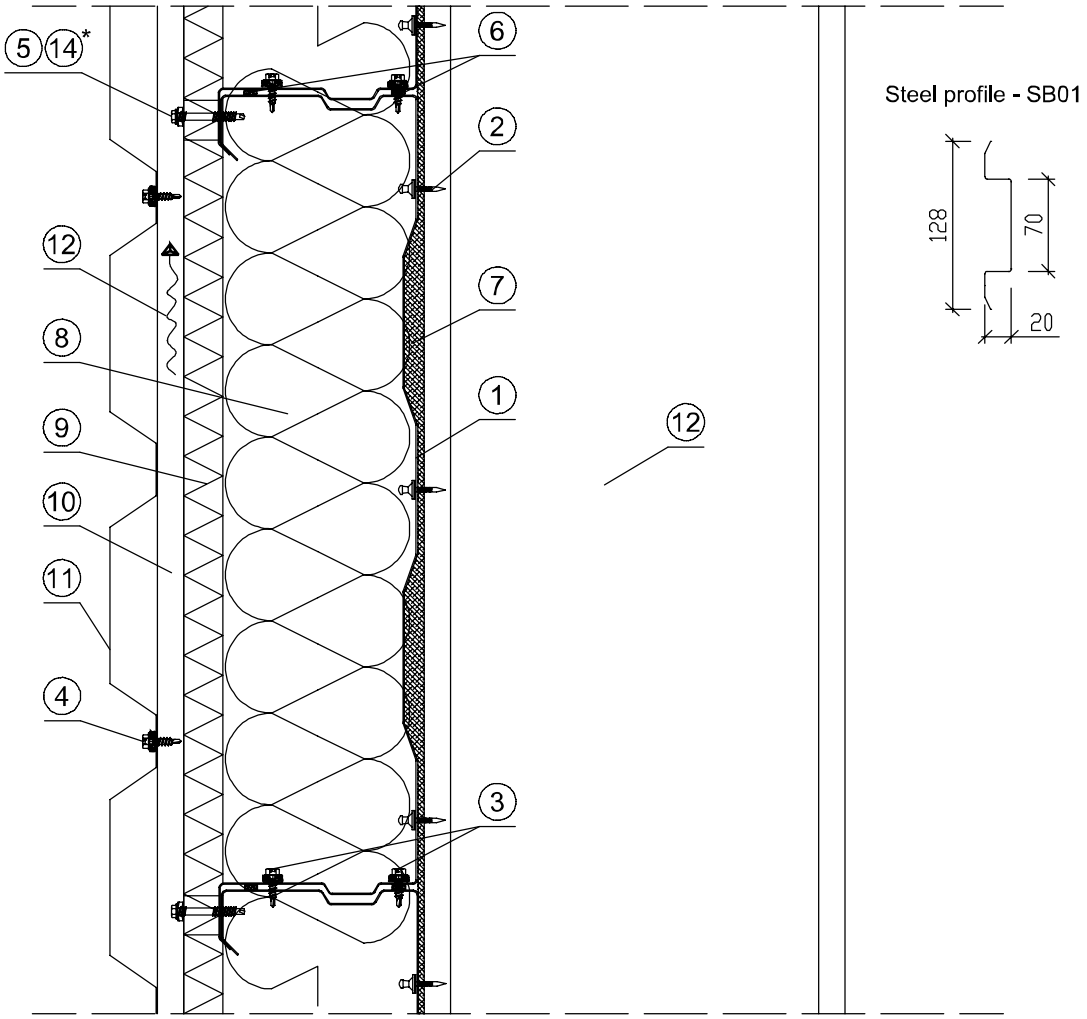

1. Liner tray.
2. Shot nail.
3. Self-drilling fastener screwed in staggered arrangement every 500 mm at maximum.
4. Self-drilling fastener in every second wave of facade profile.
5. Self-drilling fastener, 2 pcs per SB01.
6. Self-adhesive sealing tape PES 3x10 mm (recommended).
7. Self-adhesive sealing tape PUS 15x20 mm (recommended).
8. Mineral wool.
9. Wind board – mineral wool (min. density 90 kg/m^3).
10. Steel profile SB01 c/c 600 mm.
11. Profiled sheet T35-119-1035 (for facade).
12. Column according to the structural design.
13. Air-gap.
14. Self-drilling fastener in a narrow flange c/c max. 300 mm.

Notes:

* *– self-drilling fastener in a narrow flange c/c max 300 mm,*
– in every second wave of façade profile – vertical sheet arrangement,
– in other cases c/c max 300 mm.

- **LT-03-08**
  Liner tray.
  Assembly – horizontal section 1.

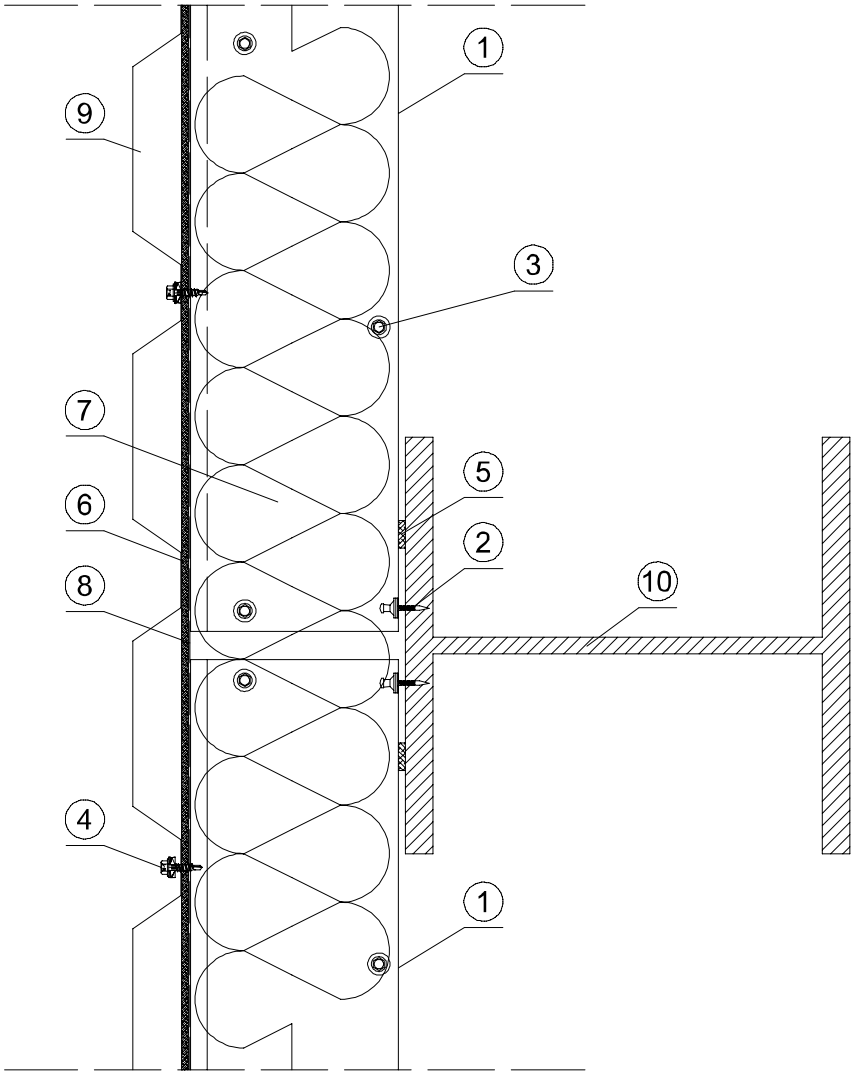

1. Liner tray.
2. Shot nail.
3. Self-drilling fastener screwed in staggered arrangement every 500 mm at maximum.
4. Self-drilling fastener in every second wave of facade profile.
5. Self-adhesive sealing tape PUS 15x20 mm (recommended).
6. Insulation tape PES 5x30 (recommended).
7. Mineral wool.
8. Wind insulation.
9. Profiled sheet T35-119-1035 (for facade).
10. Column according to the structural design.

- **LT-03-09**
  Liner tray.
  Assembly – horizontal section 2.

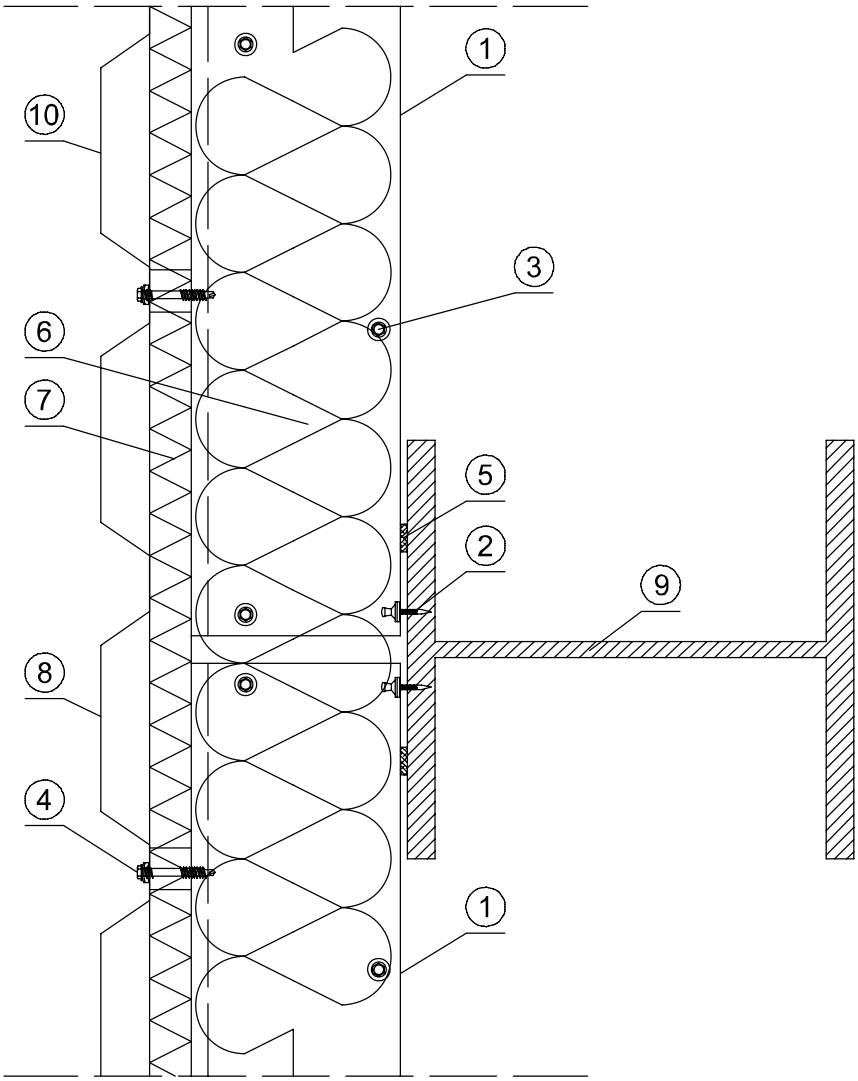

1. Liner tray.
2. Shot nail.
3. Self-drilling fastener screwed in staggered arrangement every 500 mm at maximum.
4. Self-drilling fastener in every second wave of facade profile.
5. Self-adhesive sealing tape PUS 15x20 mm (recommended).
6. Mineral wool.
7. Wind board – mineral wool (min. density 90 kg/m^3).
8. Profiled sheet T35-119-1035 (for facade).
9. Column according to the structural design.

- **LT-03-10**
  Liner tray.
  Assembly – horizontal section 3.

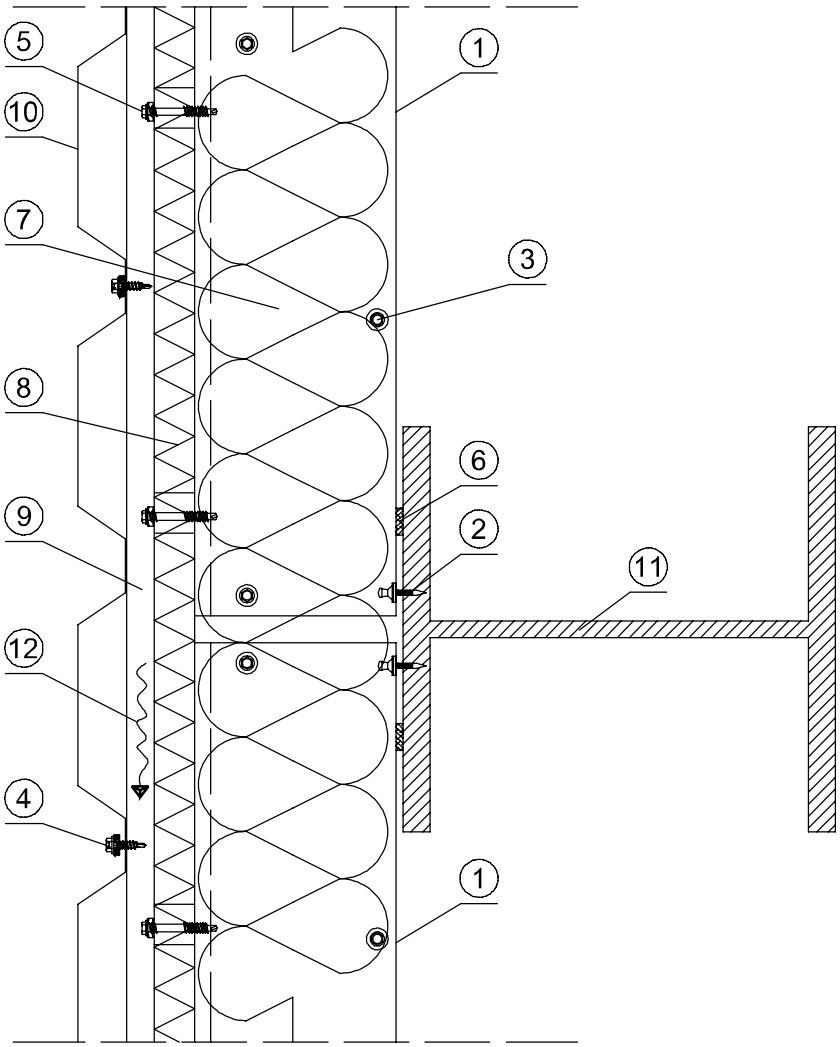

1. Liner tray.
2. Shot nail.
3. Self-drilling fastener screwed in staggered arrangement every 500 mm at maximum.
4. Self-drilling fastener in every second wave of facade profile.
5. Self-drilling fastener in a narrow flange c/c max. 300 mm.
6. Self-adhesive sealing tape PUS 15x20 mm (recommended).
7. Mineral wool.
8. Wind board – mineral wool (min. density 90 kg/m^3).
9. Steel profile SB01 c/c 600 mm.
10. Profiled sheet T35-119-1035 (for facade).
11. Column according to the structural design.
12. Air-gap.

- **LT-03-11**
  Liner tray.
  Assembly – external corner 1.

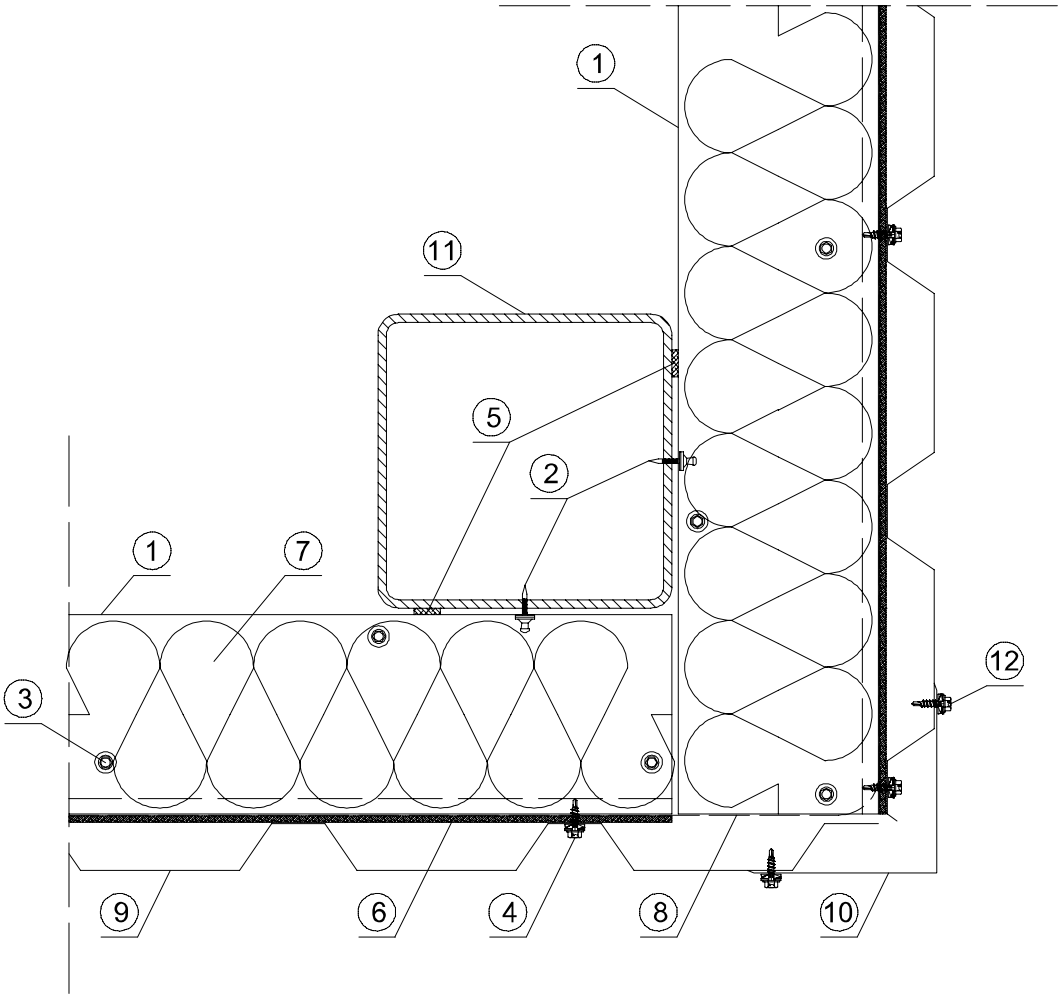

1. Liner tray.
2. Shot nail.
3. Self-drilling fastener screwed in staggered arrangement every 500 mm at maximum.
4. Self-drilling fastener in every second wave of facade profile.
5. Self-adhesive sealing tape PUS 15x20 mm (recommended).
6. Insulation tape PES 5x30 (recommended).
7. Mineral wool.
8. Wind insulation.
9. Profiled sheet T35-119-1035 (for facade).
10. Flashing FL01.
11. Column according to the structural design.
12. Self-drilling fastener or blind rivet Al/Fe every ~ 300 mm.

- **LT-03-12**
  Liner tray.
  Assembly – external corner 2.

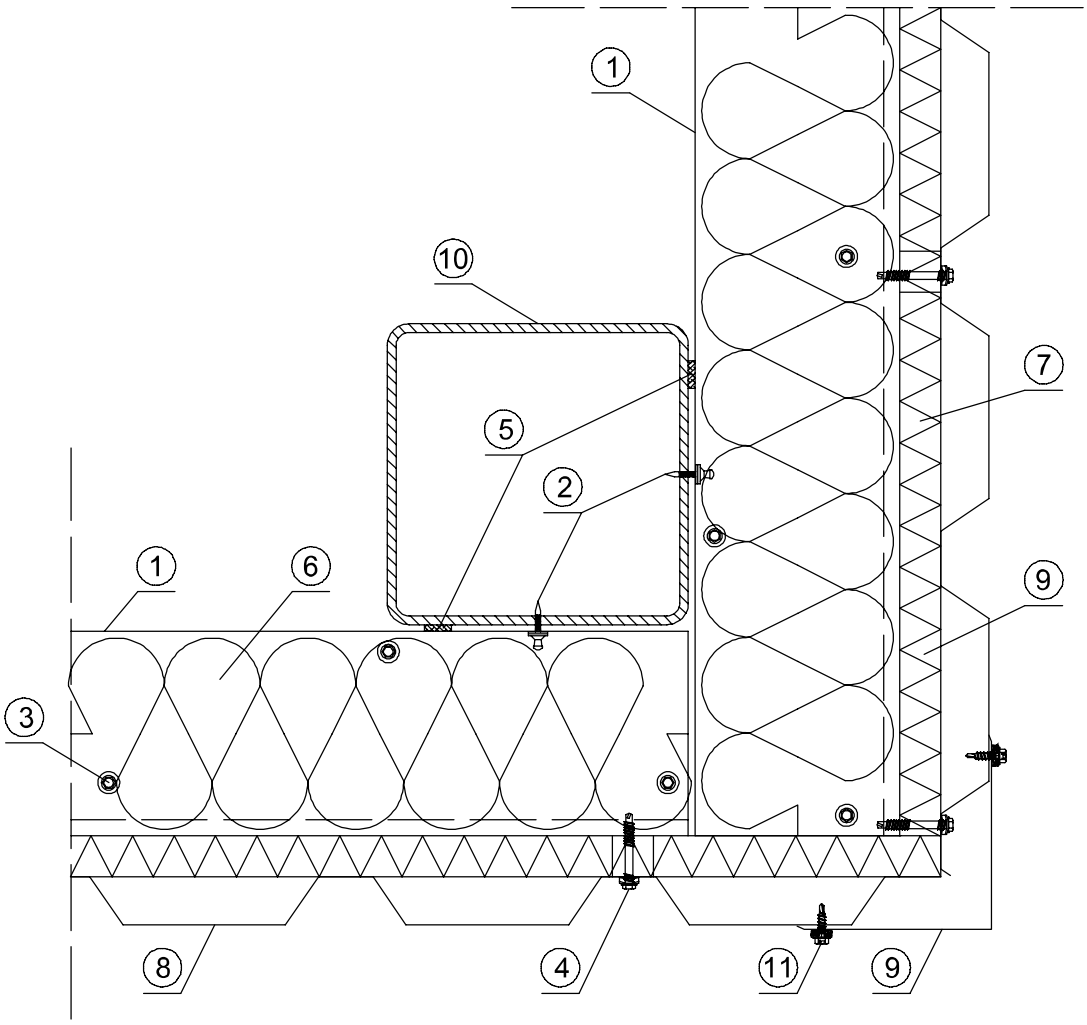

1. Liner tray.
2. Shot nail.
3. Self-drilling fastener screwed in staggered arrangement every 500 mm at maximum.
4. Self-drilling fastener in every second wave of facade profile.
5. Self-adhesive sealing tape PUS 15x20 mm (recommended).
6. Mineral wool.
7. Wind board – mineral wool (min. density 90 kg/m^3).
8. Profiled sheet T35-119-1035 (for facade).
9. Flashing FL01.
10. Column according to the structural design.
11. Self-drilling fastener or blind rivet Al/Fe every ~ 300 mm.

- **LT-03-13**
  Liner tray.
  Assembly – external corner 3.

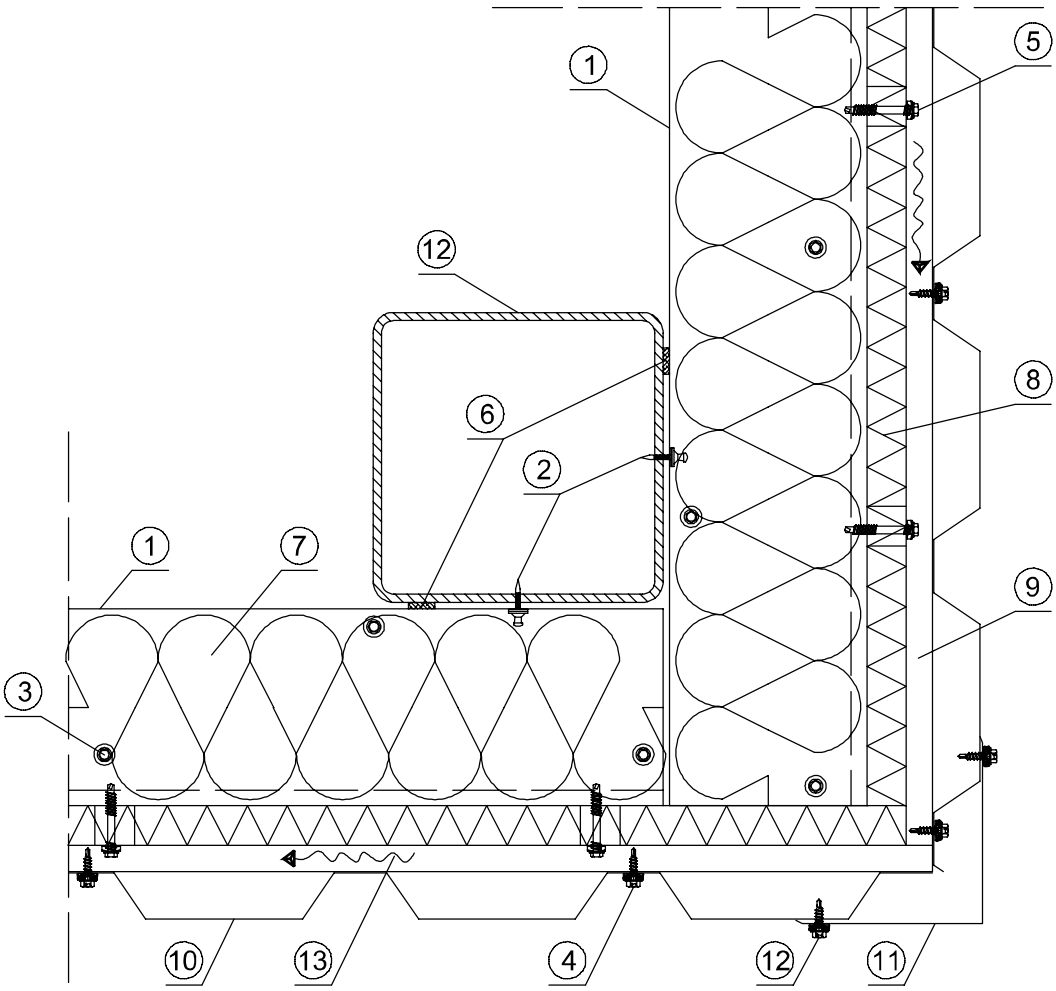

1. Liner tray.
2. Shot nail.
3. Self-drilling fastener screwed in staggered arrangement every 500 mm at maximum.
4. Self-drilling fastener in every second wave of facade profile.
5. Self-drilling fastener c/c 600 mm.
6. Self-adhesive sealing tape PUS 15x20 mm (recommended).
7. Mineral wool.
8. Wind board – mineral wool (min. density 90 kg/m^3).
9. Steel profile SB01 c/c 600 mm.
10. Profiled sheet T35-119-1035 (for facade).
11. Flashing FL01.
12. Column according to the structural design.
13. Air-gap.
14. Self-drilling fastener in a narrow flange c/c max. 300 mm.

- **LT-03-14**
  Liner tray.
  Assembly – external corner 4.

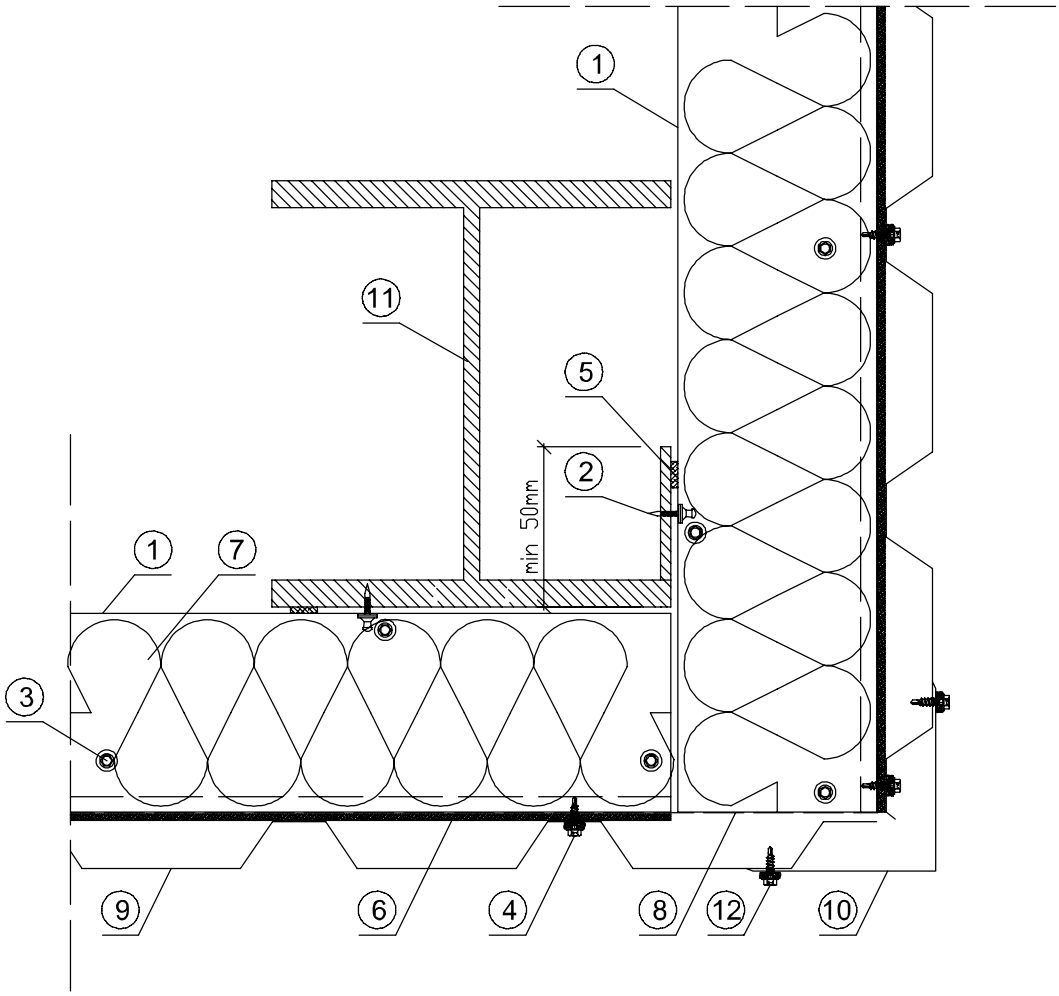

1. Liner tray.
2. Shot nail.
3. Self-drilling fastener screwed in staggered arrangement every 500 mm at maximum.
4. Self-drilling fastener in every second wave of facade profile.
5. Self-adhesive sealing tape PUS 15x20 mm (recommended).
6. Self-adhesive sealing tape PES 3x10 mm (recommended).
7. Mineral wool.
8. Wind insulation.
9. Profiled sheet T35-119-1035 (for facade).
10. Flashing FL01.
11. Column according to the structural design.
12. Self-drilling fastener or blind rivet Al/Fe every ~ 300 mm.

- **LT-03-15**
  Liner trays.
  Assembly – internal corner 1.

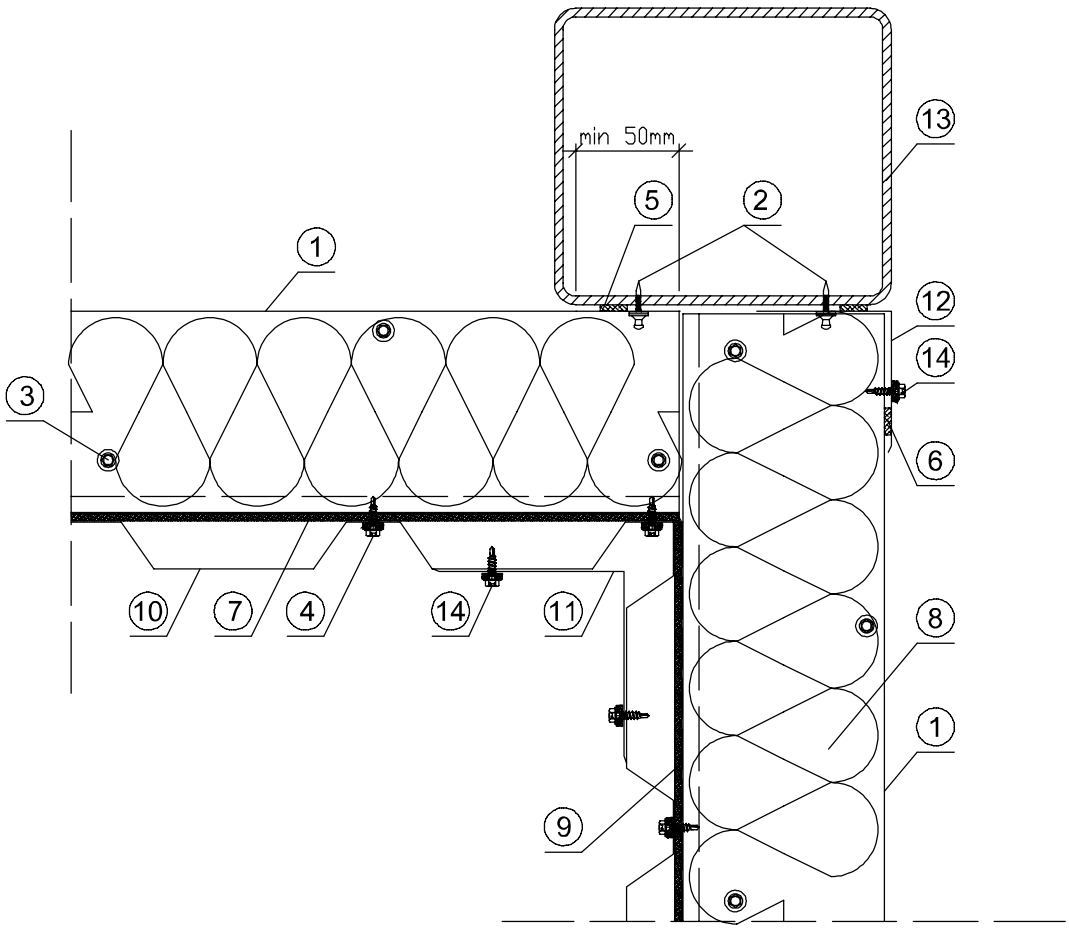

1. Liner tray.
2. Shot nail.
3. Self-drilling fastener screwed in staggered arrangement every 500 mm at maximum.
4. Self-drilling fastener in every second wave of facade profile.
5. Self-adhesive sealing tape PUS 15x20 mm (recommended).
6. Self-adhesive sealing tape PES 3x10 mm (recommended).
7. Insulation tape PES 5x30 (recommended).
8. Mineral wool.
9. Wind insulation.
10. Profiled sheet T35-119-1035 (for facade).
11. Flashing FL01.
12. Flashing FL02.
13. Column according to the structural design.
14. Self-drilling fastener or blind rivet Al/Fe every ~ 300 mm.

- **LT-03-16**
  Liner trays.
  Assembly – internal corner 2.

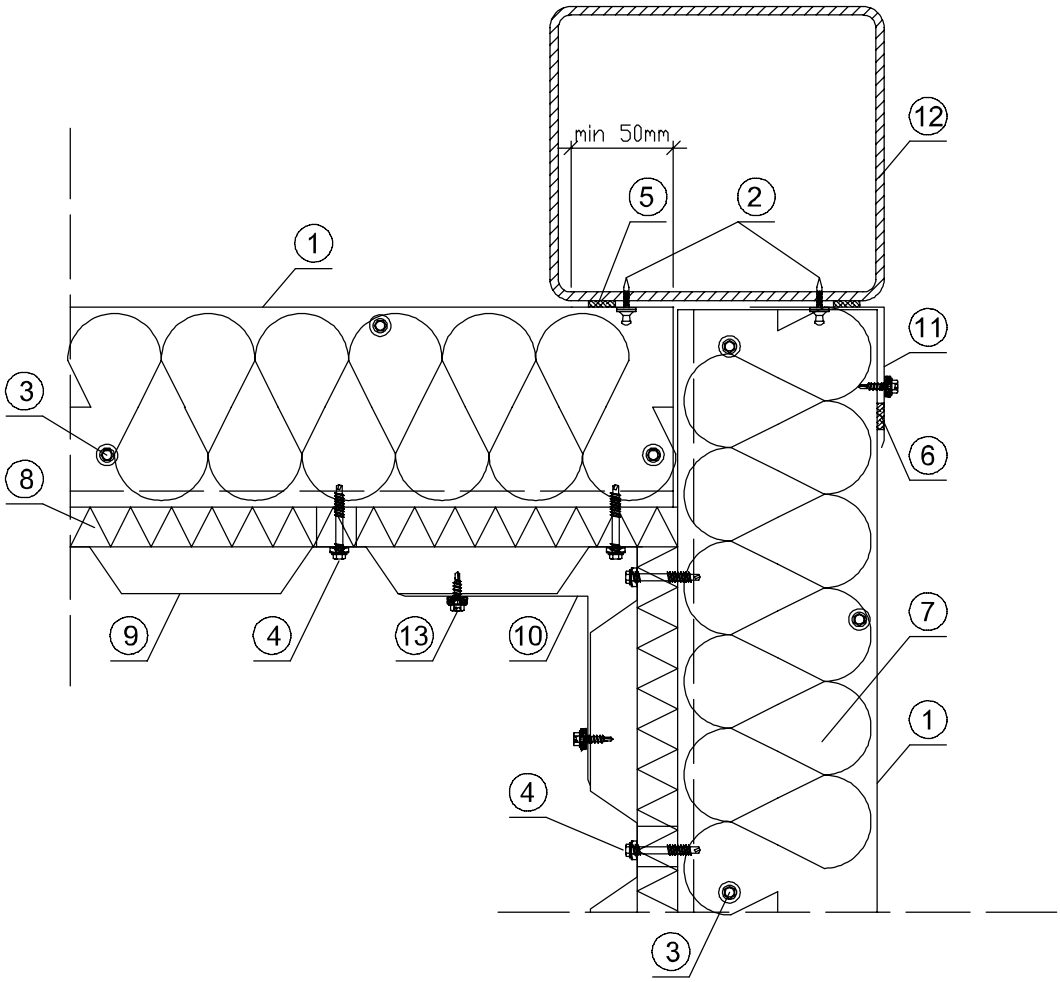

1. Liner tray.
2. Shot nail.
3. Self-drilling fastener screwed in staggered arrangement every 500 mm at maximum.
4. Self-drilling fastener in every second wave of facade profile.
5. Self-adhesive sealing tape PUS 15x20 mm (recommended).
6. Self-adhesive sealing tape PES 3x10 mm (recommended).
7. Mineral wool.
8. Wind board – mineral wool (min. density 90 kg/m^3).
9. Profiled sheet T35-119-1035 (for facade).
10. Flashing FL01.
11. Flashing FL02.
12. Column according to the structural design.
13. Self-drilling fastener or blind rivet Al/Fe every ~ 300 mm.

- **LT-03-17**
  Liner trays.
  Assembly – internal corner 3.

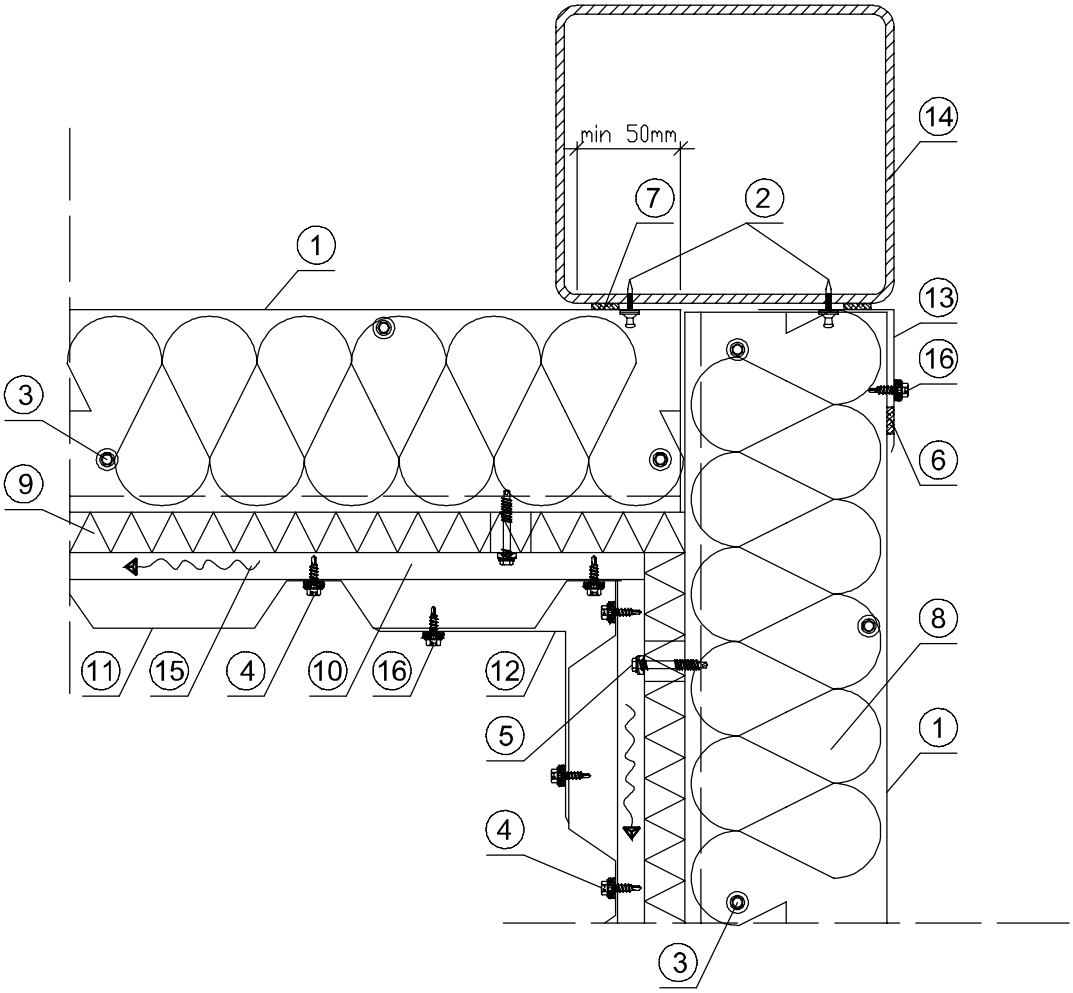

1. Liner tray.
2. Shot nail.
3. Self-drilling fastener screwed in staggered arrangement every 500 mm at maximum.
4. Self-drilling fastener in every second wave of facade profile.
5. Self-drilling fastener in a narrow flange c/c max. 300 mm.
6. Self-adhesive sealing tape PES 3x10 mm (recommended).
7. Self-adhesive sealing tape PUS 15x20 mm (recommended).
8. Mineral wool.
9. Wind board – mineral wool (min. density 90 kg/m^3).
10. Steel profile SB01 c/c 600 mm.
11. Profiled sheet T35-119-1035 (for facade).
12. Flashing FL01.
13. Flashing FL02.
14. Column according to the structural design.
15. Air-gap.
16. Self-drilling fastener or blind rivet Al/Fe every ~ 300 mm.

- **LT-03-18**
  Liner trays.
  Assembly – internal corner 4.

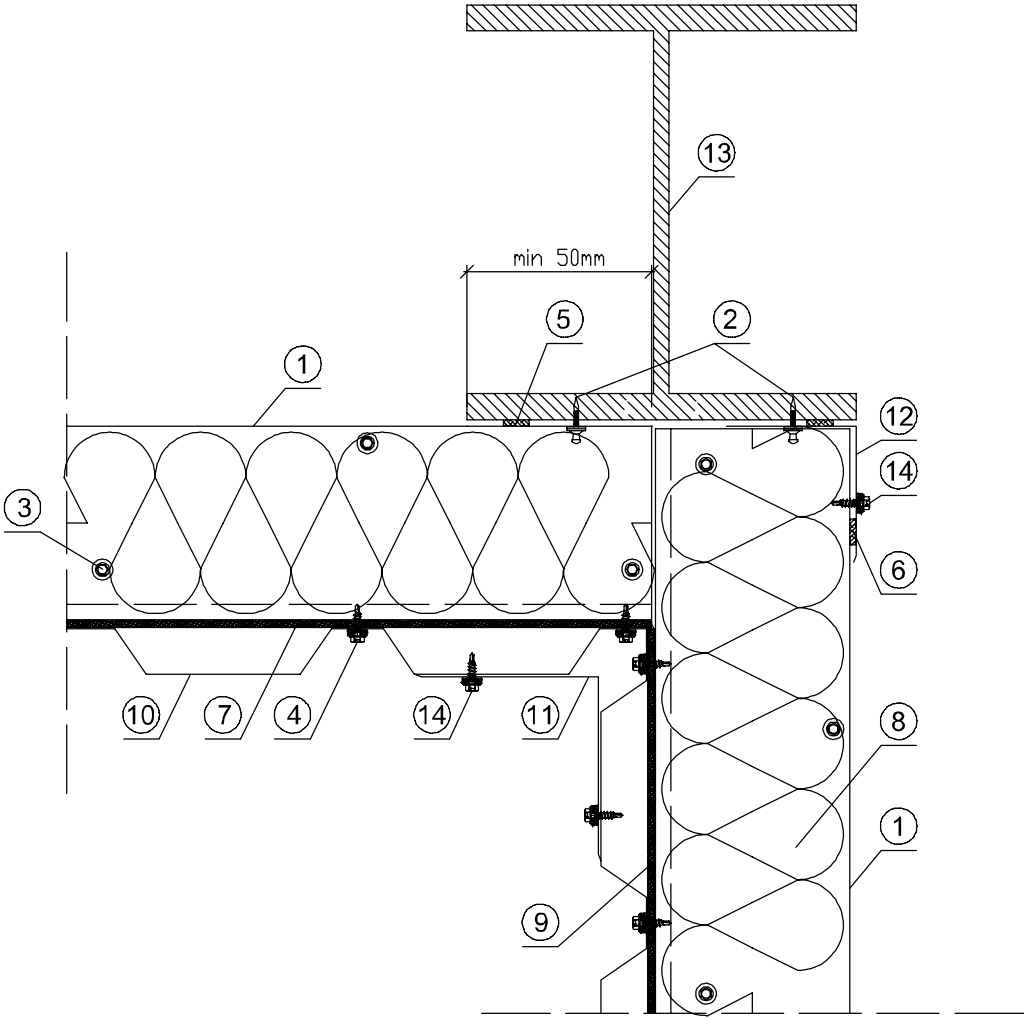

1. Liner tray.
2. Shot nail.
3. Self-drilling fastener screwed in staggered arrangement every 500 mm at maximum.
4. Self-drilling fastener in every second wave of facade profile.
5. Self-adhesive sealing tape PUS 15x20 mm (recommended).
6. Self-adhesive sealing tape PES 3x10 mm (recommended).
7. Insulation tape PES 5x30 (recommended).
8. Mineral wool.
9. Wind insulation.
10. Profiled sheet T35-119-1035 (elewacyjna).
11. Flashing FL01.
12. Flashing FL02.
13. Column according to the structural design.
14. Self-drilling fastener or blind rivet Al/Fe every ~ 300 mm.

- **LT-04-01**
  Liner tray.
  Assembly – vertical section 1. Perforated liner tray.

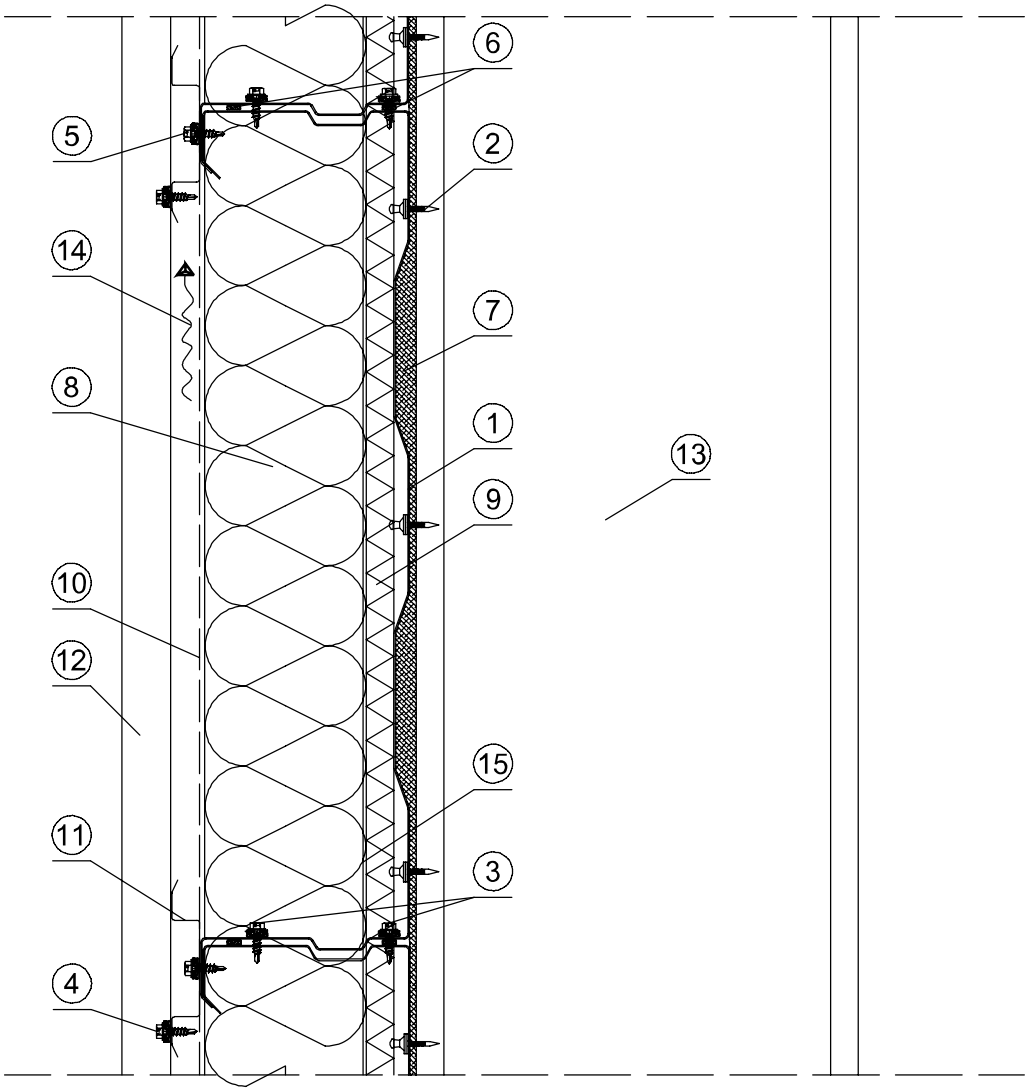

1. Liner tray.
2. Shot nail.
3. Self-drilling fastener screwed in staggered arrangement every 500 mm at maximum.
4. Self-drilling fastener in every second wave of facade profile.
5. Self-drilling fastener in a narrow flange c/c max. 300 mm.
6. Self-adhesive sealing tape PES 3x10 mm (recommended).
7. Self-adhesive sealing tape PUS 15x20 mm (recommended).
8. Mineral wool.
9. Mineral wool.
10. Wind insulation.
11. Steel profile SB01.
12. Profiled sheet T35-119-1035 (for facade).
13. Column according to the structural design.
14. Air-gap.
15. Vapour-tight foil.

- **LT-04-02**
  Liner tray.
  Assembly – vertical section 2. Perforated liner tray.

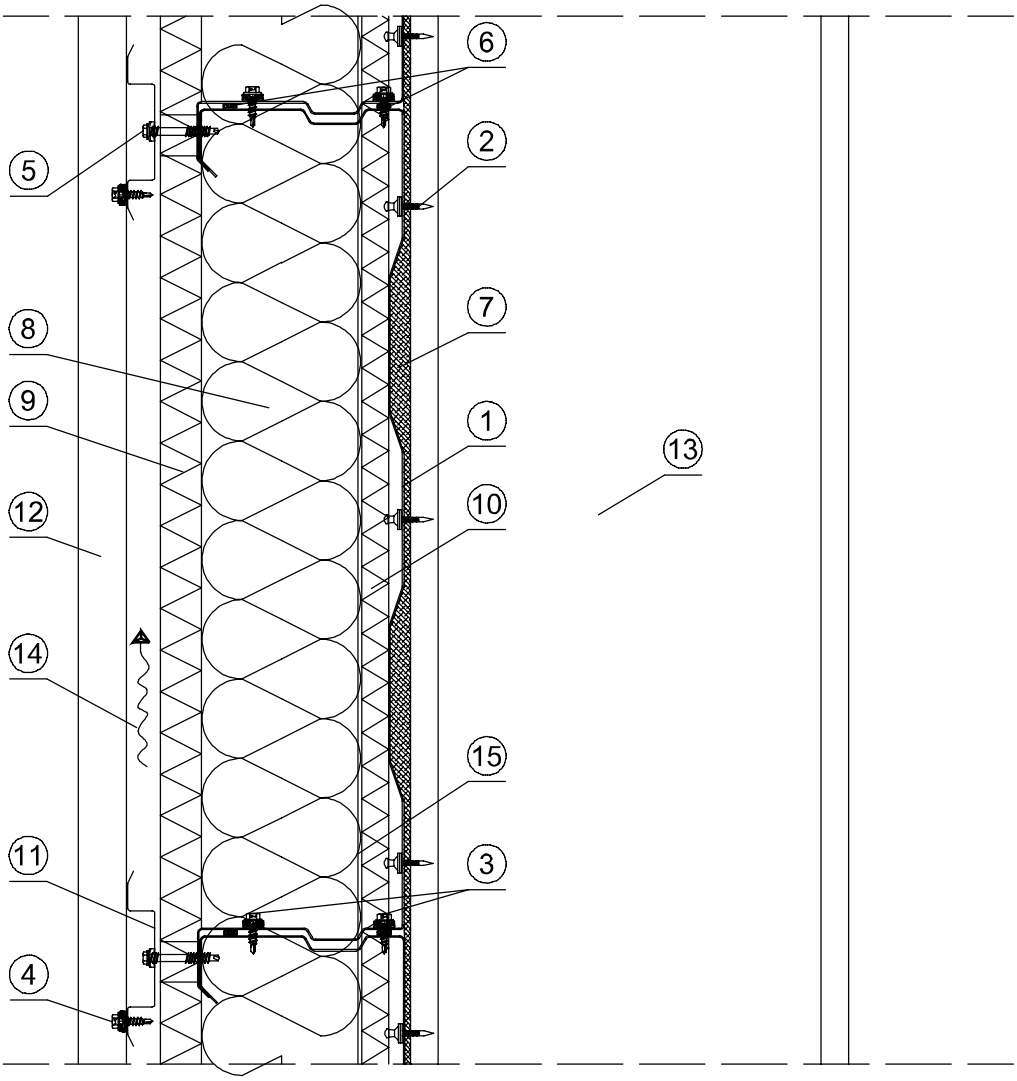

1. Liner tray.
2. Shot nail.
3. Self-drilling fastener screwed in staggered arrangement every 500 mm at maximum.
4. Self-drilling fastener in every second wave of facade profile.
5. Self-drilling fastener in a narrow flange c/c max. 300 mm.
6. Self-adhesive sealing tape PES 3x10 mm (recommended).
7. Self-adhesive sealing tape PUS 15x20 mm (recommended).
8. Mineral wool.
9. Wind board – mineral wool (min. density 90 kg/m^3).
10. Mineral wool.
11. Steel profile SB01.
12. Profiled sheet T35-119-1035 (for facade).
13. Column according to the structural design.
14. Air-gap.
15. Vapour-tight foil.

- **LT-05-01**
  Liner tray.
  Assembly – ground beam 1.

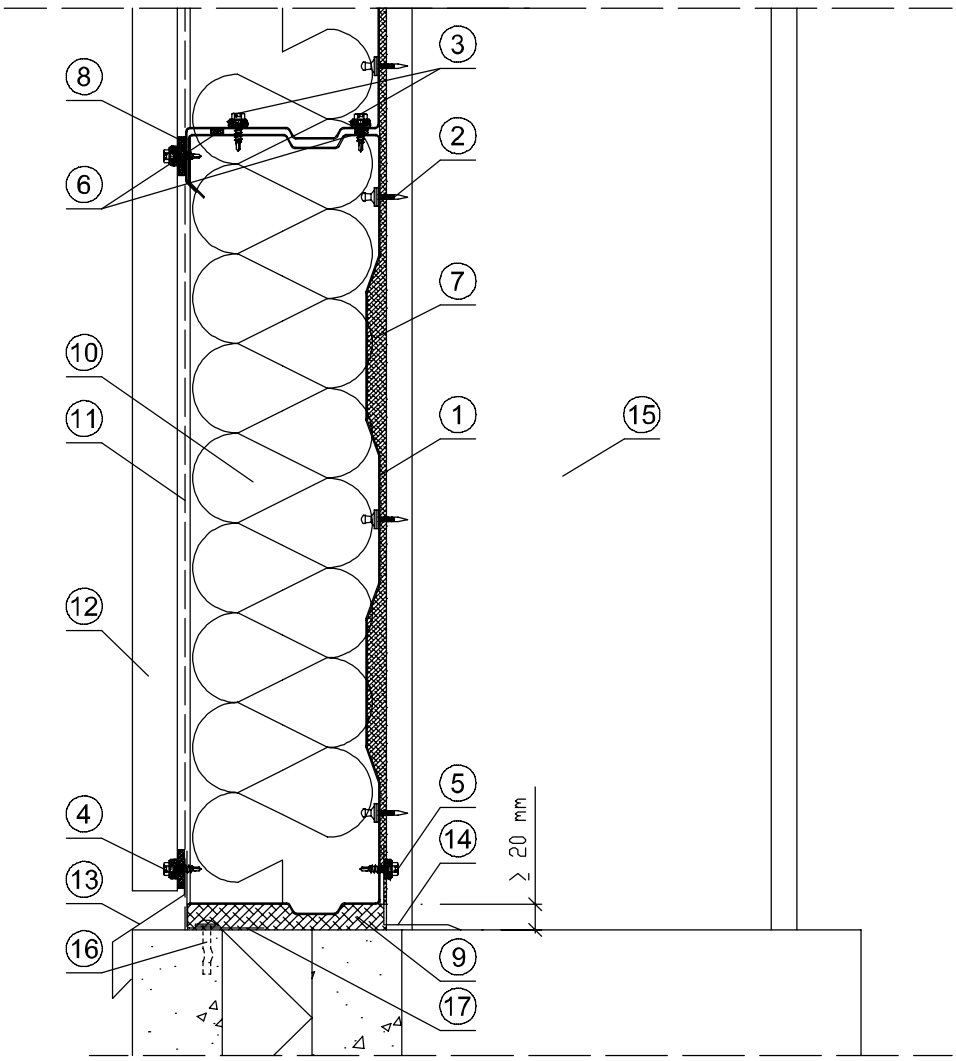

1. Liner tray.
2. Shot nail.
3. Self-drilling fastener screwed in staggered arrangement every 500 mm at maximum.
4. Self-drilling fastener in every second wave of facade profile.
5. Self-drilling fastener or blind rivet Al/Fe every ~ 300 mm.
6. Self-adhesive sealing tape PES 3x10 mm (recommended).
7. Self-adhesive sealing tape PUS 15x20 mm (recommended).
8. Insulation tape PES 5x30 (recommended).
9. Impregnated polyurethane seal, thickness 20 mm.
10. Mineral wool.
11. Wind insulation.
12. Profiled sheet T35-119-1035 (for facade).
13. Flashing FL02.
14. Flashing FL03.
15. Column according to the structural design.
16. Nail for concrete c/c 600 mm.
17. Angle according to the structural design (60x60x1.5).

- **LT-05-02**
  Liner tray.
  Assembly – ground beam 2.

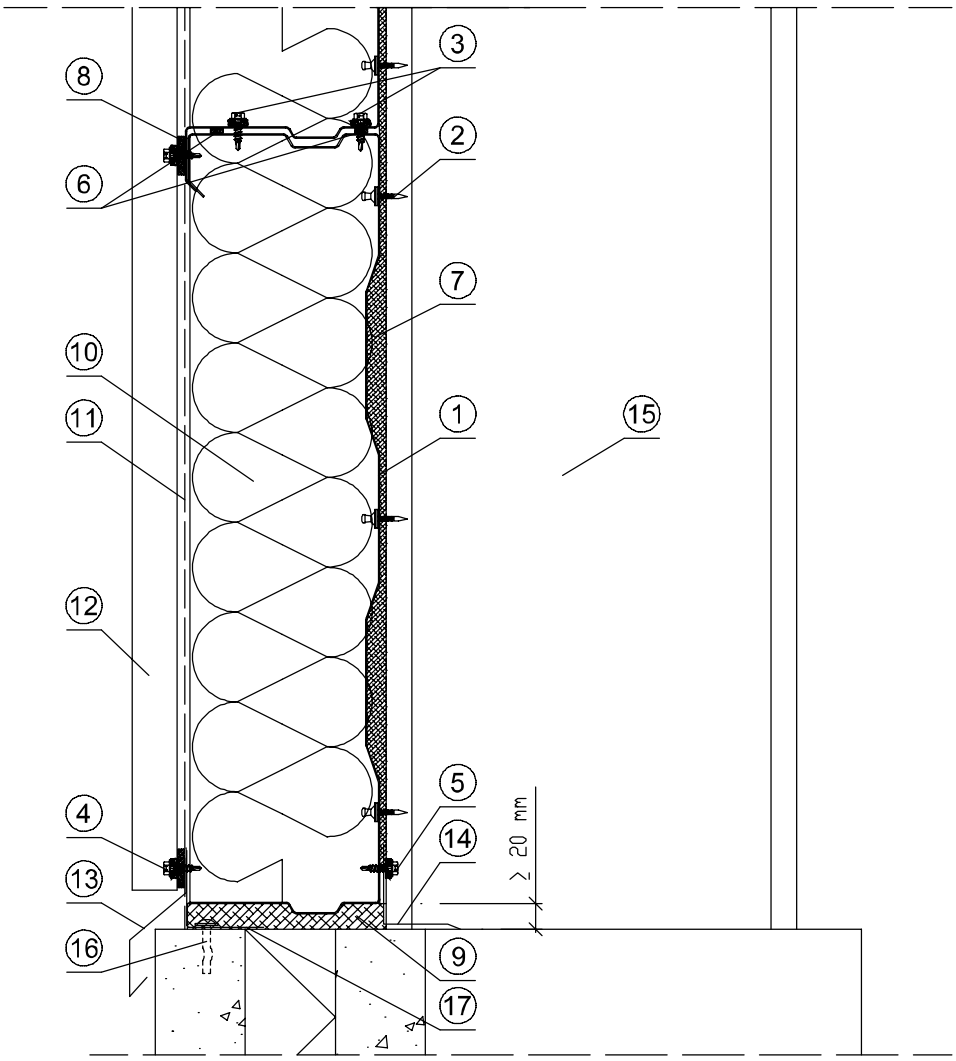

1. Liner tray.
2. Shot nail.
3. Self-drilling fastener screwed in staggered arrangement every 500 mm at maximum.
4. Self-drilling fastener in every second wave of facade profile.
5. Self-drilling fastener or blind rivet Al/Fe every ~ 300 mm.
6. Self-adhesive sealing tape PES 3x10 mm (recommended).
7. Self-adhesive sealing tape PUS 15x20 mm (recommended).
8. Insulation tape PES 5x30 (recommended).
9. Impregnated polyurethane seal, thickness 20 mm.
10. Mineral wool.
11. Wind insulation.
12. Profiled sheet T35-119-1035 (for facade).
13. Flashing FL04.
14. Flashing FL03.
15. Column according to the structural design.
16. Nail for concrete c/c 600 mm.
17. Angle according to the structural design (60x60x1.5).

- **LT-05-03**
  Liner tray.
  Assembly – ground beam 3.

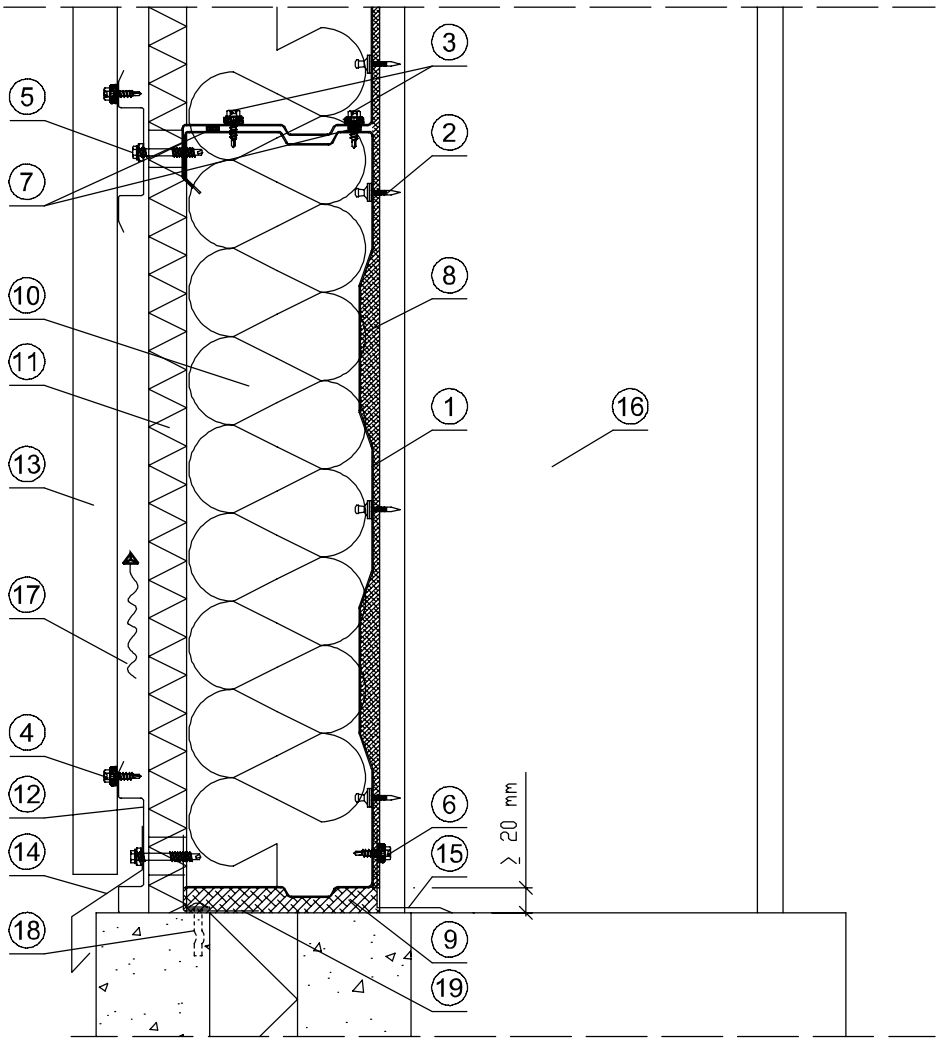

1. Liner tray.
2. Shot nail.
3. Self-drilling fastener screwed in staggered arrangement every 500 mm at maximum.
4. Self-drilling fastener in every second wave of facade profile.
5. Self-drilling fastener in a narrow flange c/c max. 300 mm.
6. Self-drilling fastener or blind rivet Al/Fe every ~ 300 mm.
7. Self-adhesive sealing tape PES 3x10 mm (recommended).
8. Self-adhesive sealing tape PUS 15x20 mm (recommended).
9. Impregnated polyurethane seal, thickness 20 mm.
10. Mineral wool.
11. Wind board – mineral wool (min. density 90 kg/m^3).
12. Steel profile SB01.
13. Profiled sheet T35-119-1035 (for facade).
14. Flashing FL02.
15. Flashing FL03.
16. Column according to the structural design.
17. Air-gap.
18. Nail for concrete c/c 600 mm.
19. Angle according to the structural design (60x60x1.5).

- **LT-05-04**
  Liner tray.
  Assembly – ground beam 4.

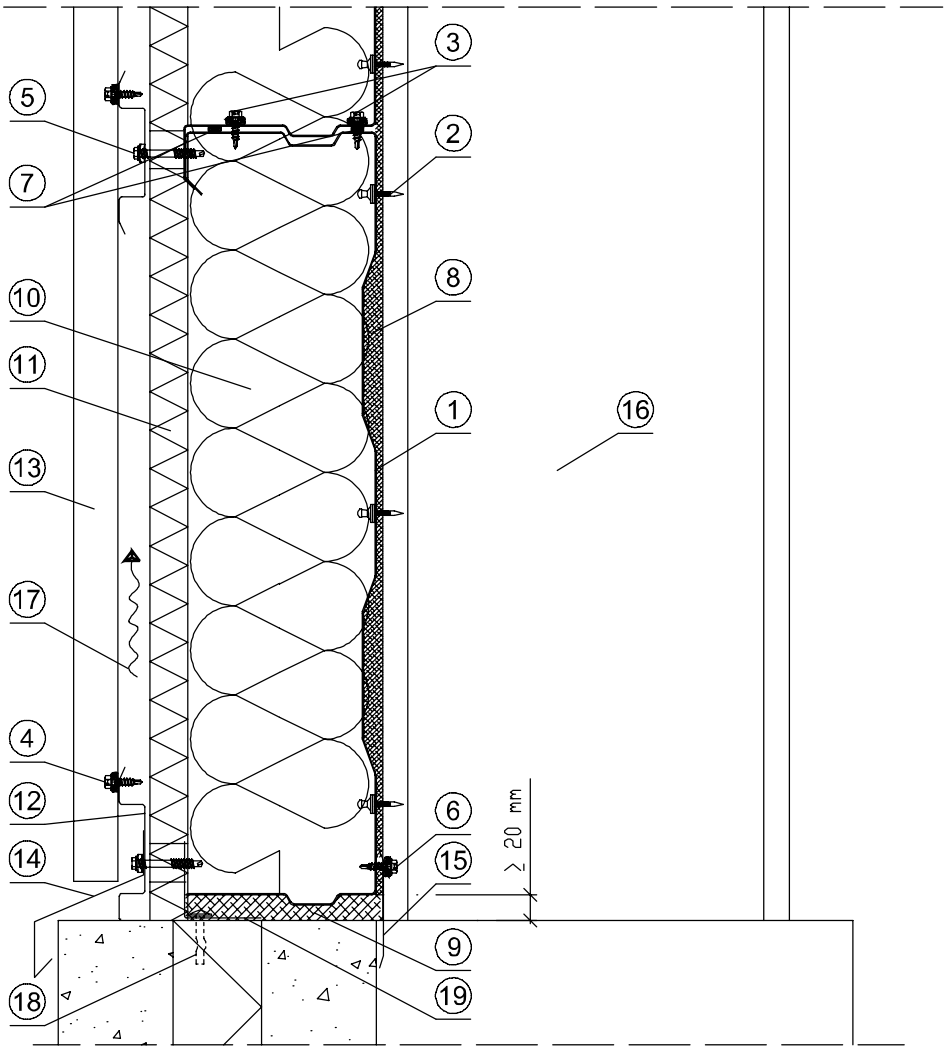

1. Liner tray.
2. Shot nail.
3. Self-drilling fastener screwed in staggered arrangement every 500 mm at maximum.
4. Self-drilling fastener in every second wave of facade profile.
5. Self-drilling fastener in a narrow flange c/c max. 300 mm.
6. Self-drilling fastener or blind rivet Al/Fe every ~ 300 mm.
7. Self-adhesive sealing tape PES 3x10 mm (recommended).
8. Self-adhesive sealing tape PUS 15x20 mm (recommended).
9. Impregnated polyurethane seal, thickness 20 mm.
10. Mineral wool.
11. Wind board – mineral wool (min. density 90 kg/m^3).
12. Steel profile SB01.
13. Profiled sheet T35-119-1035 (for facade).
14. Flashing FL05.
15. Flashing FL06.
16. Column according to the structural design.
17. Air-gap.
18. Nail for concrete c/c 600 mm.
19. Angle according to the structural design (60x60x1.5).

- **LT-06-01**
  Liner tray.
  Assembly – eaves 1.

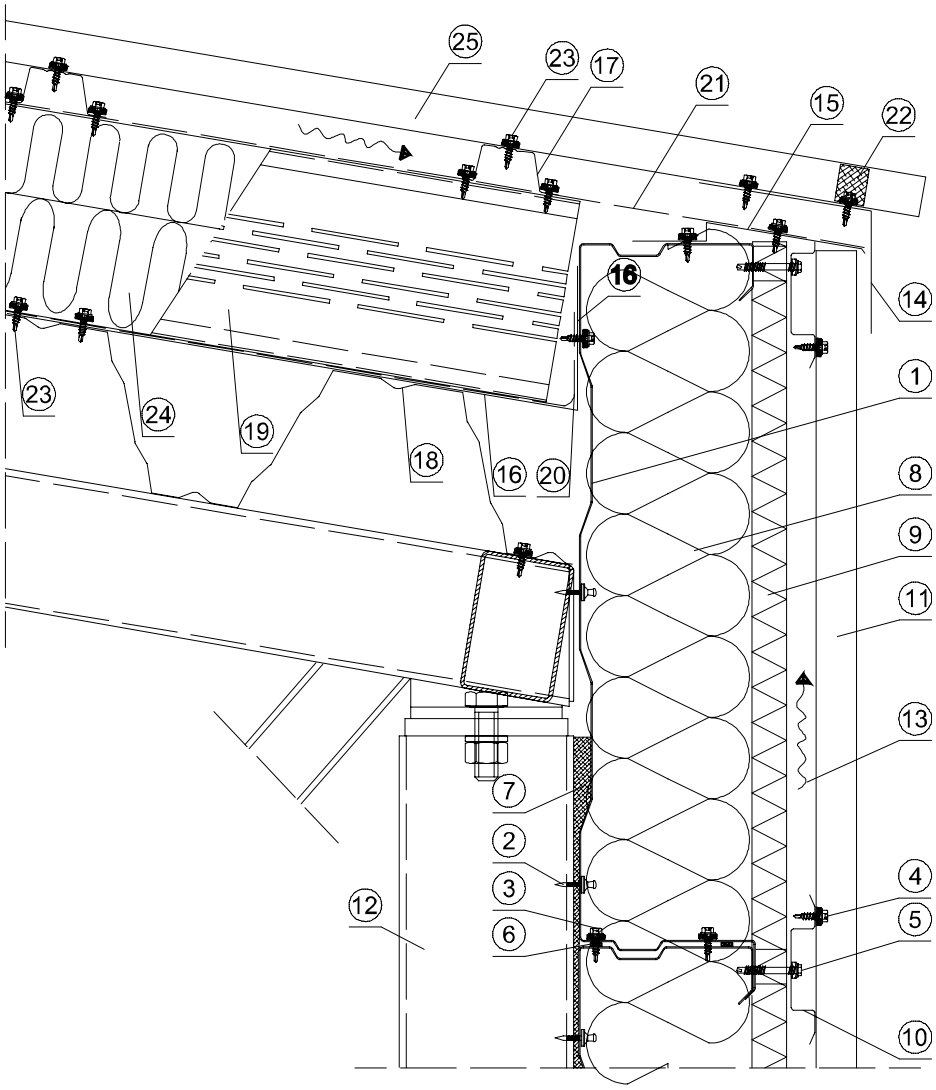

1. Liner tray.
2. Shot nail.
3. Self-drilling fastener screwed in staggered arrangement every 500 mm at maximum.
4. Self-drilling fastener in every second wave of facade profile.
5. Self-drilling fastener in a narrow flange c/c max. 300 mm.
6. Self-adhesive sealing tape PES 3x10 mm (recommended).
7. Self-adhesive sealing tape PUS 15x20 mm (recommended).
8. Mineral wool.
9. Wind board – mineral wool (min. density 90 kg/m^3).
10. Steel profile SB01.
11. Profiled sheet T35-119-1035 (for facade).
12. Column according to the structural design.
13. Air-gap.
14. Flashing FL07.
15. Flashing FL08.
16. Flashing FL09.
17. Ruukki's ventilating steel batten.
18. Ruukki's load bearing sheet according to the structural design.
19. Ruukki's termo steel profile.
20. Vapour-tight foil.
21. Vapour permeable foil.
22. Insulation tape PUS.
23. Self-drilling fastener.
24. Mineral wool according to the design.
25. Ruukki's profiled sheet (for roof).

- **LT-06-02**
  Liner tray.
  Assembly – eaves 2.

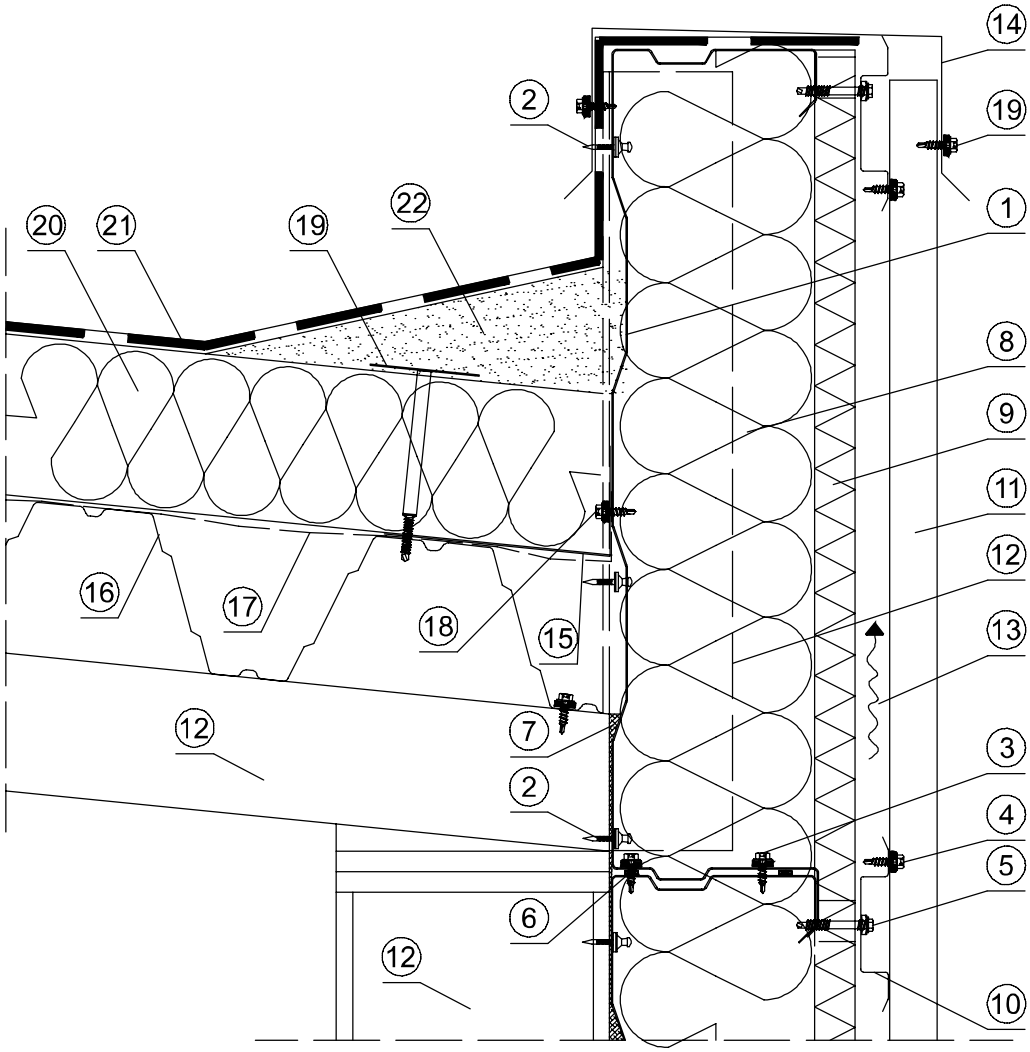

1. Liner tray.
2. Shot nail.
3. Self-drilling fastener screwed in staggered arrangement every 500 mm at maximum.
4. Self-drilling fastener in every second wave of facade profile.
5. Self-drilling fastener in a narrow flange c/c max. 300 mm.
6. Self-adhesive sealing tape PES 3x10 mm (recommended).
7. Self-adhesive sealing tape PUS 15x20 mm (recommended).
8. Mineral wool.
9. Wind board – mineral wool (min. density 90 kg/m^3).
10. Steel profile SB01.
11. Profiled sheet T35-119-1035 (for facade).
12. Structure according to the design.
13. Air-gap.
14. Flashing FL10.
15. Flashing FL11.
16. Ruukki's load bearing sheet according to the structural design.
17. Vapour-tight foil.
18. Self-drilling fastener c/c 300 mm.
19. Telescopic fastener.
20. Mineral wool according to the design.
21. Hydroinsulation according to the design.
22. Pitch according to the design.

- **LT-07-01**
  Liner tray.
  Assembly – window 1. Vertical section.

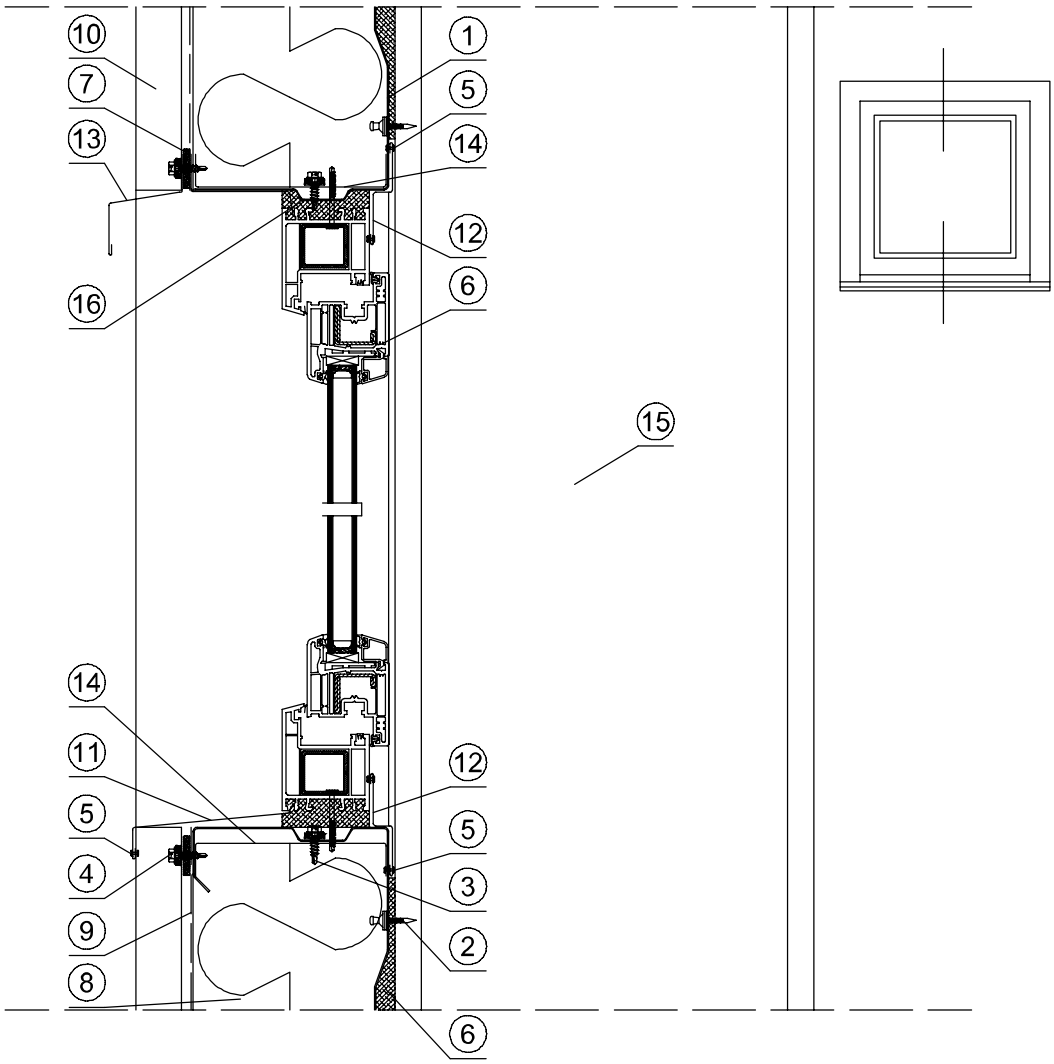

1. Liner tray.
2. Shot nail.
3. Self-drilling fastener c/c 500 mm.
4. Self-drilling fastener in every second wave of facade profile.
5. Self-drilling fastener or blind rivet Al/Fe every ~ 300 mm.
6. Self-adhesive sealing tape PUS 15x20 mm (recommended).
7. Insulation tape PES 5x30 (recommended).
8. Mineral wool.
9. Wind insulation.
10. Profiled sheet T35-119-1035 (for facade).
11. Flashing FL12.
12. Flashing FL13.
13. Flashing FL14.
14. Purlin according to the structural design.
15. Column according to the structural design.
16. Installation foam.

- **LT-07-02**
  Liner tray.
  Assembly – window 2. Vertical section.

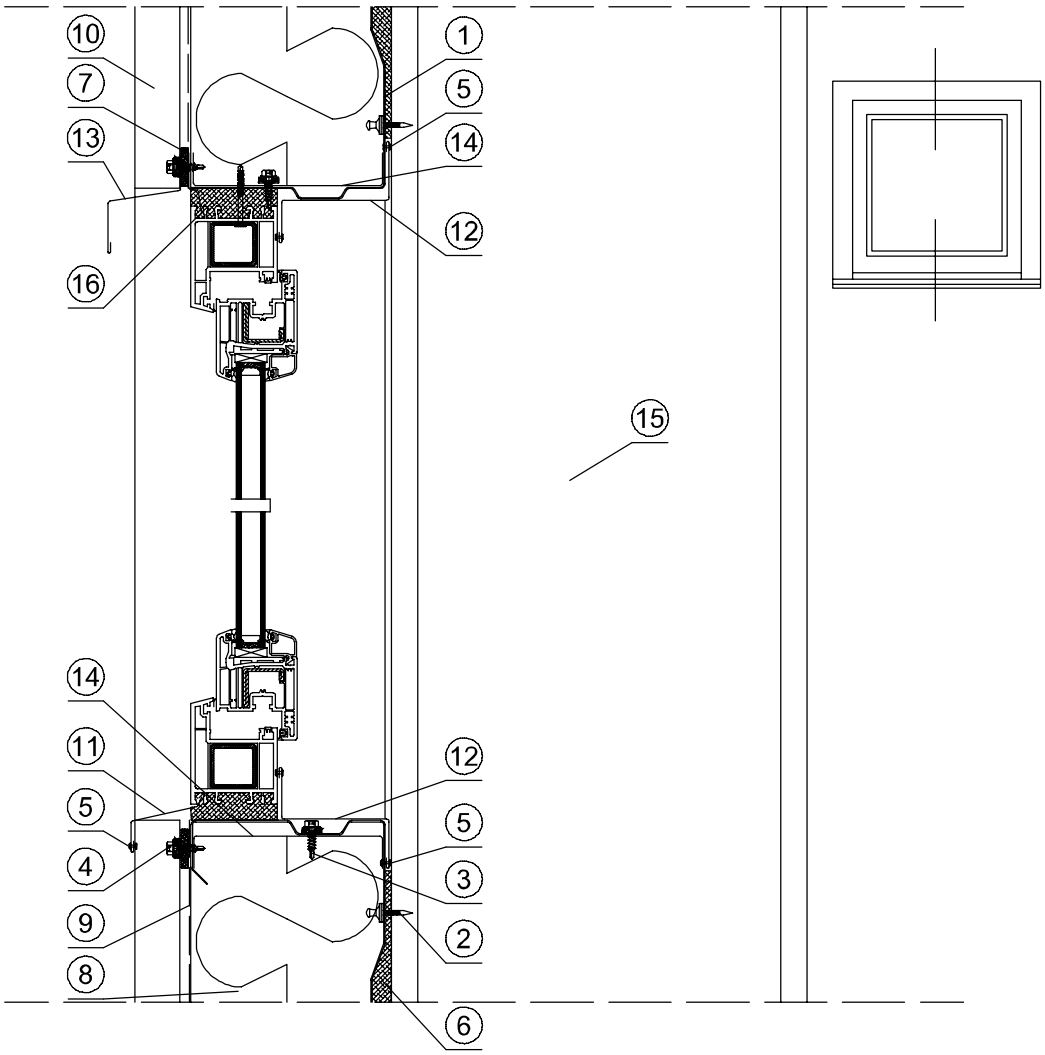

1. Liner tray.
2. Shot nail.
3. Self-drilling fastener c/c 500 mm.
4. Self-drilling fastener in every second wave of facade profile.
5. Self-drilling fastener or blind rivet Al/Fe every ~ 300 mm.
6. Self-adhesive sealing tape PUS 15x20 mm (recommended).
7. Insulation tape PES 5x30 (recommended).
8. Mineral wool.
9. Wind insulation.
10. Profiled sheet T35-119-1035 (for facade).
11. Flashing FL12.
12. Flashing FL13.
13. Flashing FL14.
14. Purlin according to the structural design.
15. Column according to the structural design.
16. Installation foam.

- **LT-07-03**
  Liner tray.
  Assembly – window 3. Vertical section.

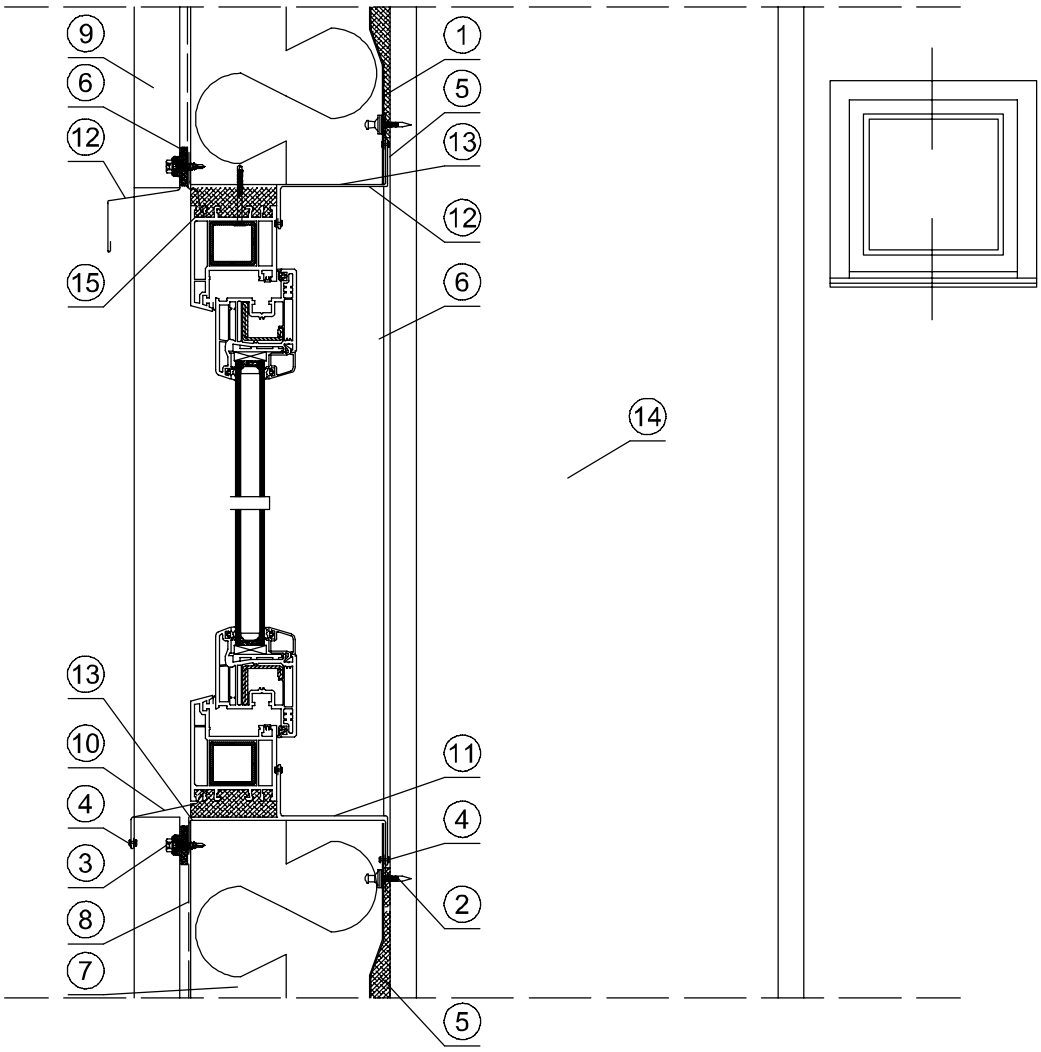

1. Liner tray.
2. Shot nail.
3. Self-drilling fastener c/c 500 mm.
4. Self-drilling fastener in every second wave of facade profile.
5. Self-drilling fastener or blind rivet Al/Fe every ~ 300 mm.
6. Self-adhesive sealing tape PUS 15x20 mm (recommended).
7. Insulation tape PES 5x30 (recommended).
8. Mineral wool.
9. Wind insulation.
10. Profiled sheet T35-119-1035 (for facade).
11. Flashing FL12.
12. Flashing FL13.
13. Flashing FL14.
14. Purlin according to the structural design.
15. Column according to the structural design.
16. Installation foam.

- **LT-07-04**
  Liner tray.
  Assembly – window 4. Vertical section.

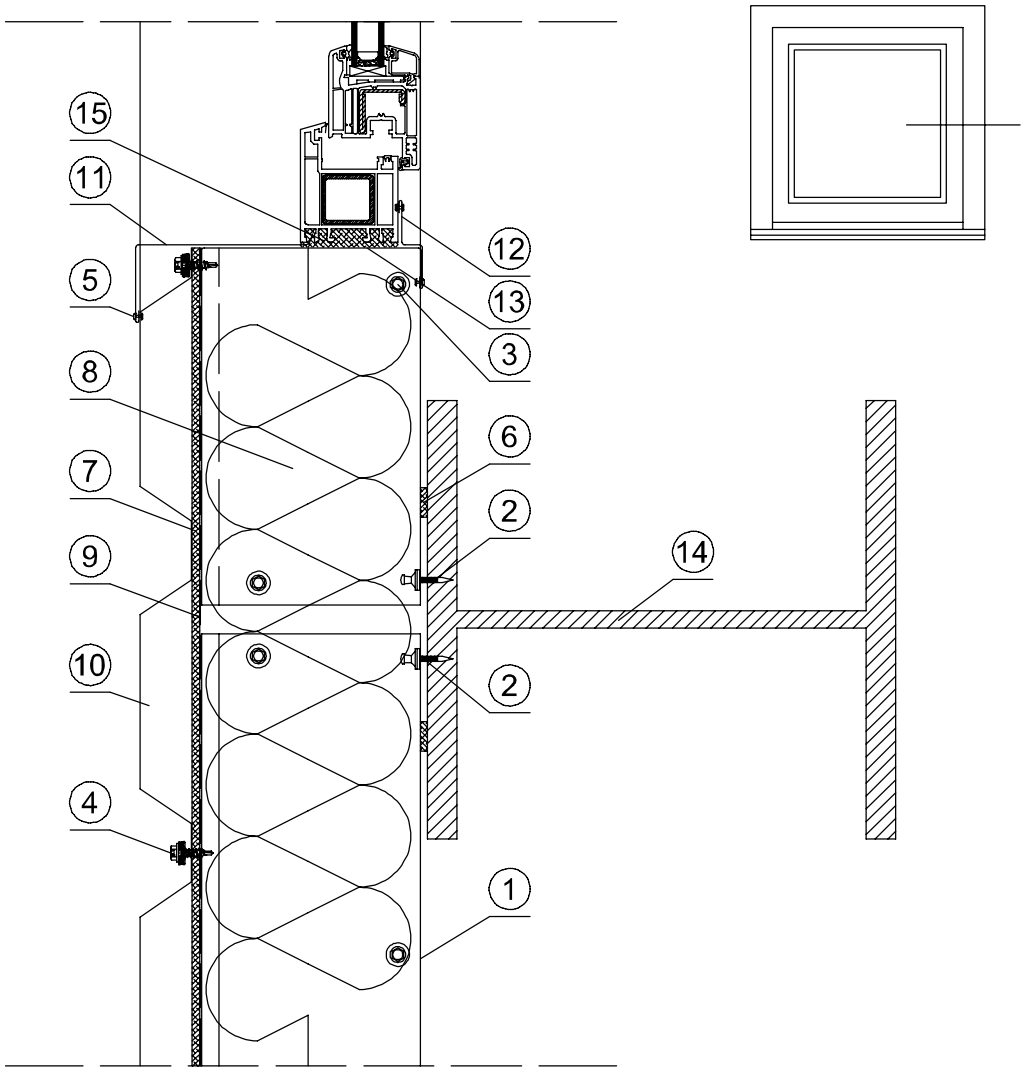

1. Liner tray.
2. Shot nail.
3. Self-drilling fastener screwed in staggered arrangement every 500 mm at maximum.
4. Self-drilling fastener in every second wave of facade profile.
5. Self-drilling fastener or blind rivet Al/Fe every ~ 300 mm.
6. Self-adhesive sealing tape PUS 15x20 mm (recommended).
7. Insulation tape PES 5x30 (recommended).
8. Mineral wool.
9. Wind insulation.
10. Profiled sheet T35-119-1035 (for facade).
11. Flashing FL15.
12. Flashing FL13.
13. Purlin according to the structural design.
14. Column according to the structural design.
15. Installation foam.

- **LT-07-05**
  Liner tray.
  Assembly – gate. Horizontal section.

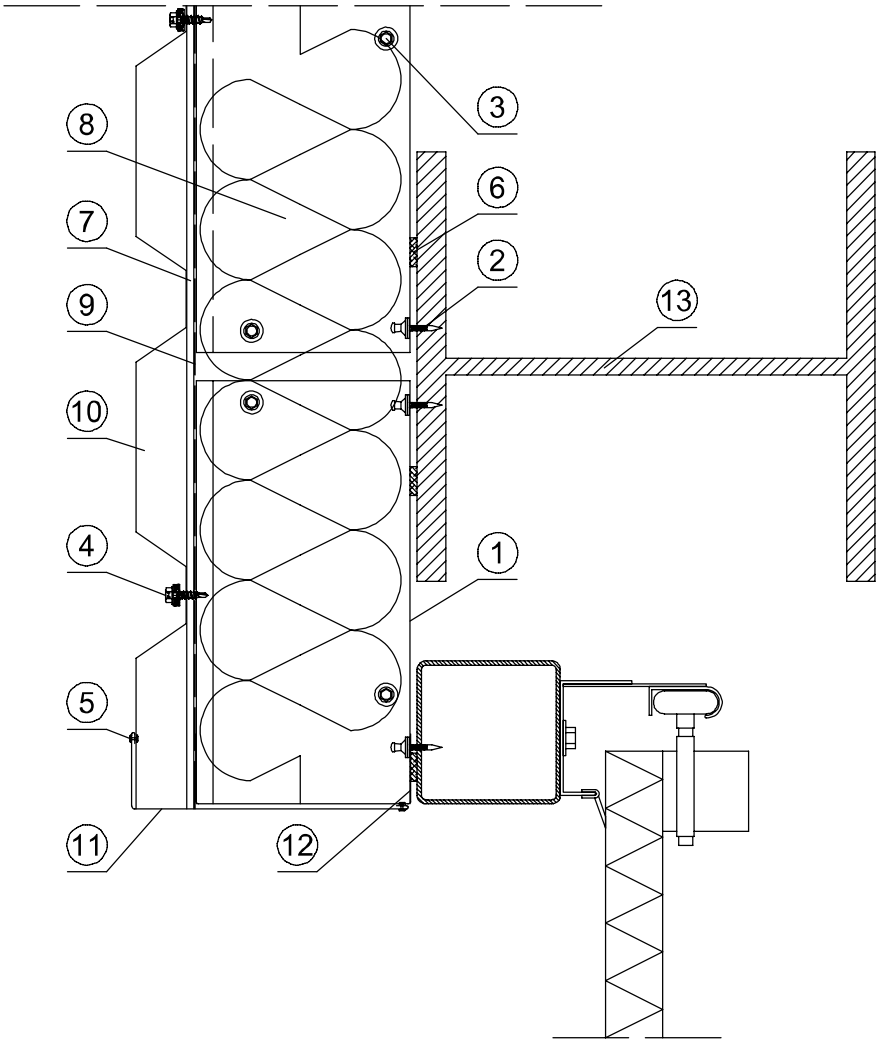

1. Liner tray.
2. Shot nail.
3. Self-drilling fastener screwed in staggered arrangement every 500 mm at maximum.
4. Self-drilling fastener in every second wave of facade profile.
5. Self-drilling fastener or blind rivet Al/Fe every ~ 300 mm.
6. Self-adhesive sealing tape PUS 15x20 mm (recommended).
7. Insulation tape PES 5x30 (recommended).
8. Mineral wool.
9. Wind insulation.
10. Profiled sheet T35-119-1035 (for facade).
11. Flashing FL16.
12. Purlin according to the structural design.
13. Column according to the structural design.

- **LT-08-01**
  Liner tray.
  Fire resistance EI 30. Section.

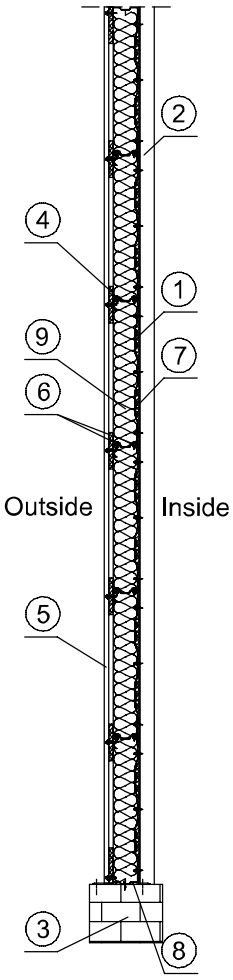

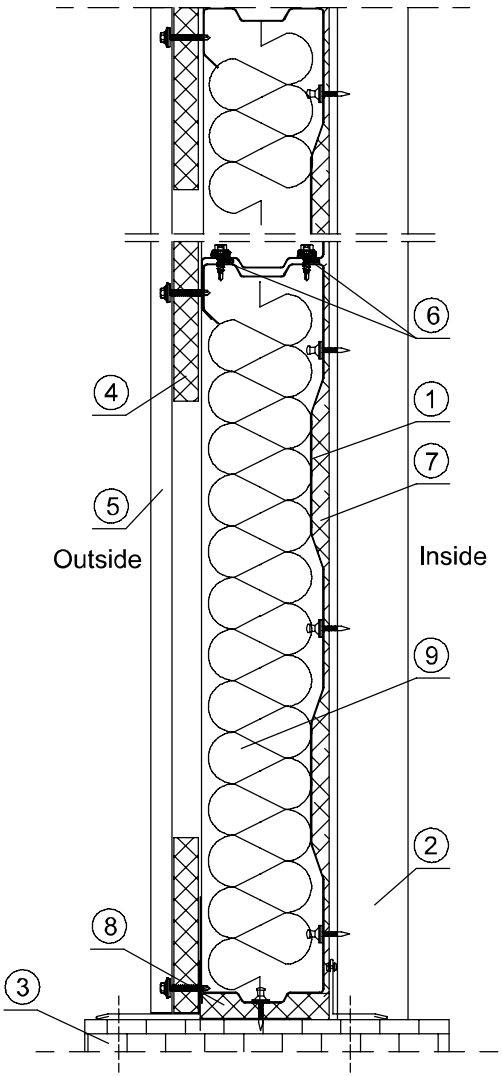

1. Liner tray LT100-600S.
2. Hot-rolled angle.
3. Foundation.
4. Insulation block hxt=100x19 mm.
5. Ruukki's profiled sheet.
6. Self-adhesive sealing tape PES 3x10 mm.
7. Self-adhesive sealing tape PUS 15x20 mm.
8. Impregnated polyurethane seal, thickness 20 mm.
9. Isover Polterm Uni mineral wool, thickness 100 mm.

- **LT-08-02**
  Liner tray.
  Fire resistance EI 60. Section.

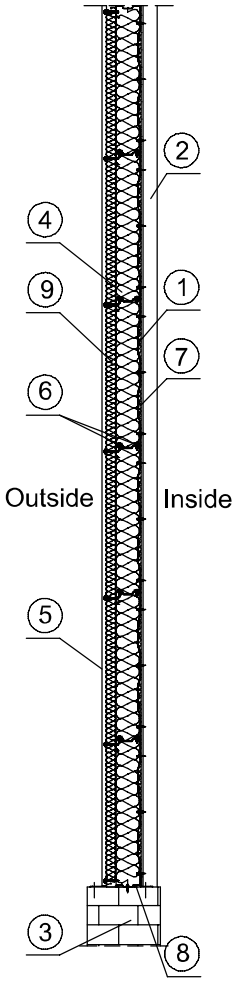

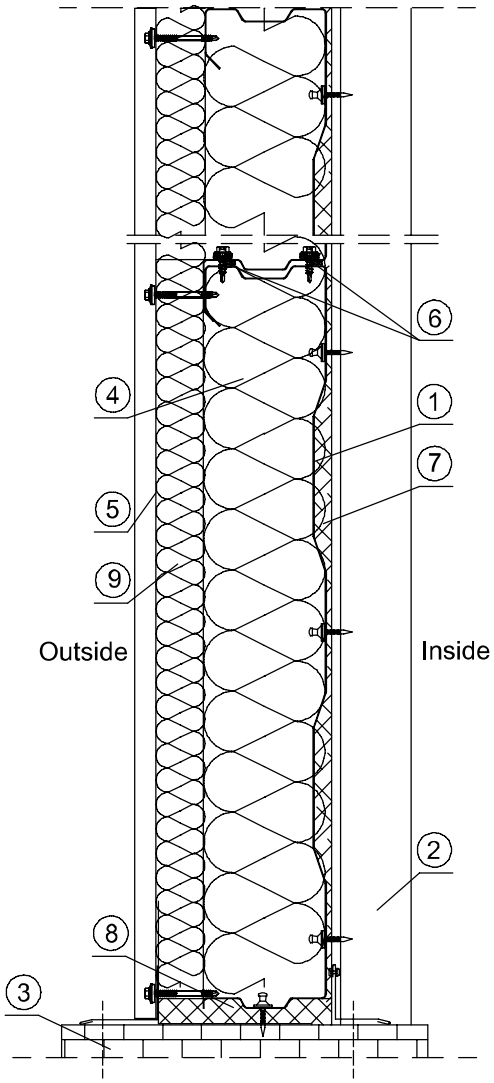

1. Liner tray LT100-600S.
2. Hot-rolled angle L65x65x7.
3. Foundation.
4. Isover mineral rock wool, density min. 50.0 kg/m³, thickness 100 mm.
5. Ruukki's profiled sheet.
6. Self-adhesive sealing tape PES 3x10 mm.
7. Self-adhesive sealing tape PUS 15x20 mm.
8. Impregnated polyurethane seal, thickness 20 mm.
9. Isover mineral rock wool, density min. 80.0 kg/m³, min. thickness 40 mm.

- **LT-08-03**
  Liner tray.
  Fire resistance EI 60. Section.

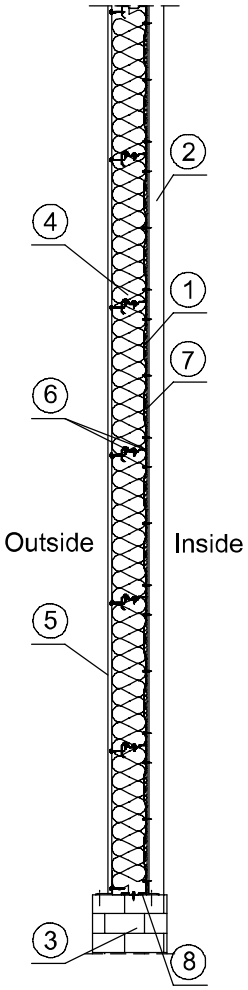

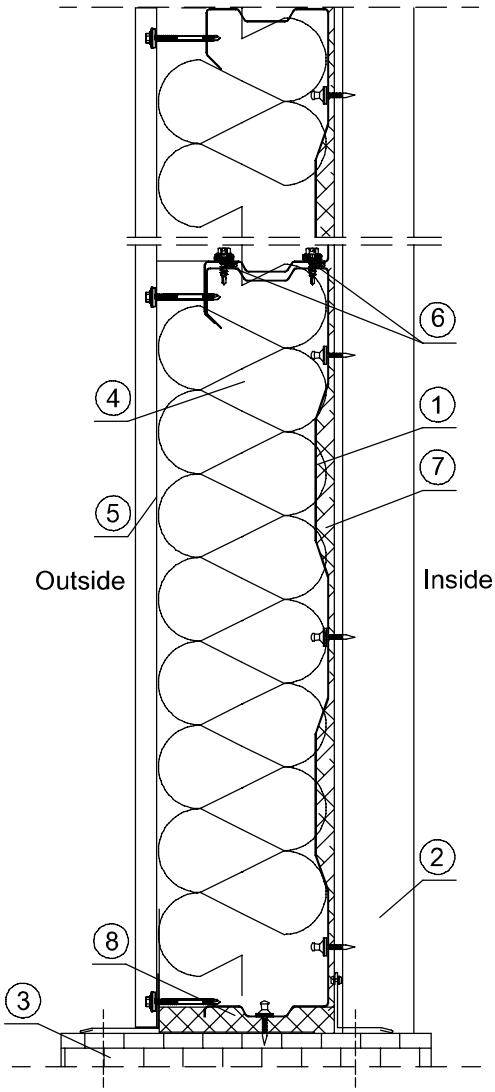

1. Liner tray LT100-600S.
2. Hot-rolled angle L65x65x7.
3. Foundation.
4. Rockwool Stalrock Max mineral rock wool, density min. 55.0 kg/m^3, thickness 140 mm.
5. Ruukki's profiled sheet.
6. Self-adhesive sealing tape PES 3x10 mm.
7. Self-adhesive sealing tape PUS 15x20 mm.
8. Impregnated polyurethane seal, thickness 20 mm.

- **LT-09-01**
  Liner tray.
  Acoustic insulation Rw=44 dB. Section.

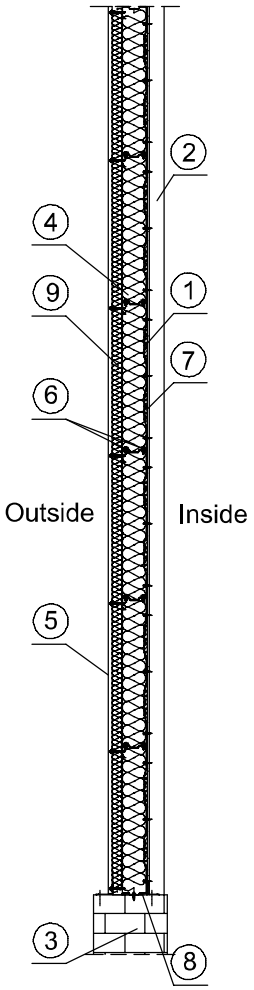

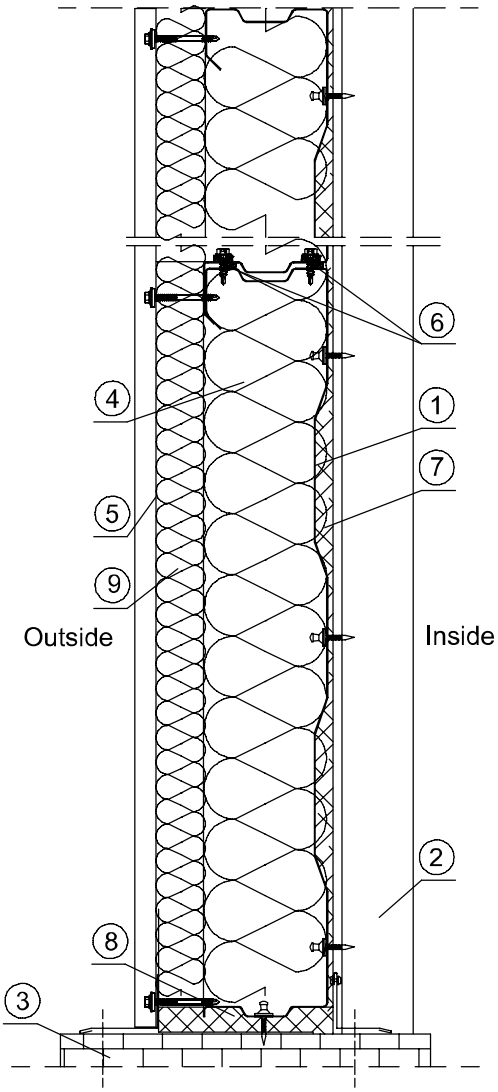

1. Liner tray LT100-600S.
2. Hot-rolled angle L65x65x7.
3. Foundation.
4. Isover mineral rock wool, density min. 50.0 kg/m³, thickness 100 mm.
5. Ruukki's profiled sheet.
6. Self-adhesive sealing tape PES 3x10 mm.
7. Self-adhesive sealing tape PUS 15x20 mm.
8. Impregnated polyurethane seal, thickness 20 mm.
9. Isover mineral rock wool, density min. 80.0 kg/m³, min. thickness 40 mm.

- **LT-09-02**
  Liner tray.
  Acoustic insulation Rw=42 dB. Section.

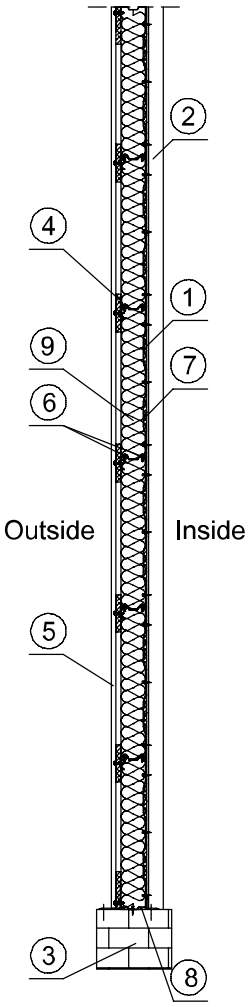

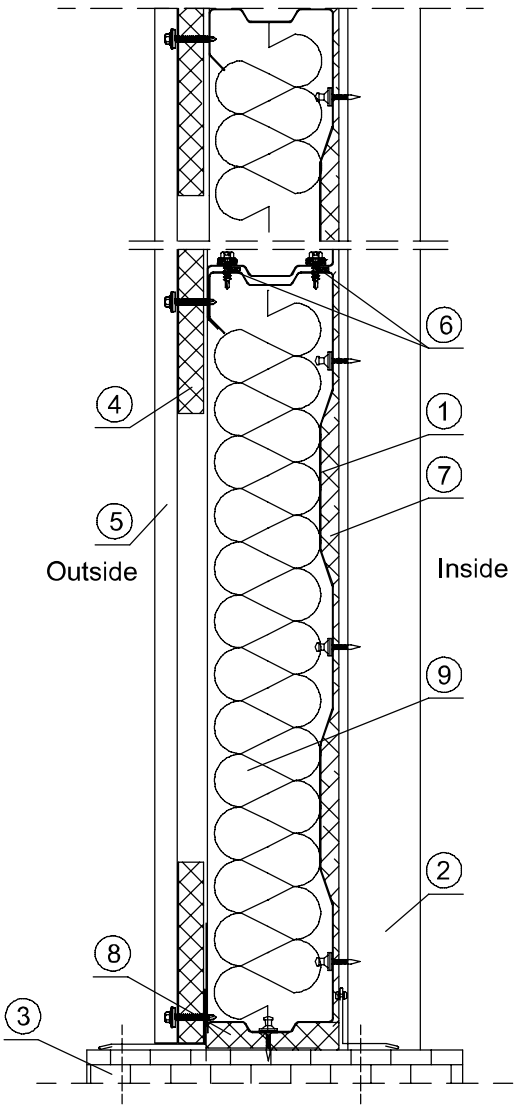

1. Liner tray LT100-600S.
2. Hot-rolled angle.
3. Foundation.
4. Insulation block hxt=100x19 mm.
5. Ruukki's profiled sheet.
6. Self-adhesive sealing tape PES 3x10 mm.
7. Self-adhesive sealing tape PUS 15x20 mm.
8. Impregnated polyurethane seal, thickness 20 mm
9. Isover Polterm Uni mineral wool, thickness 100 mm.

- **LT-09-03**
  Liner tray.
  Acoustic insulation Rw=42 dB. Section.

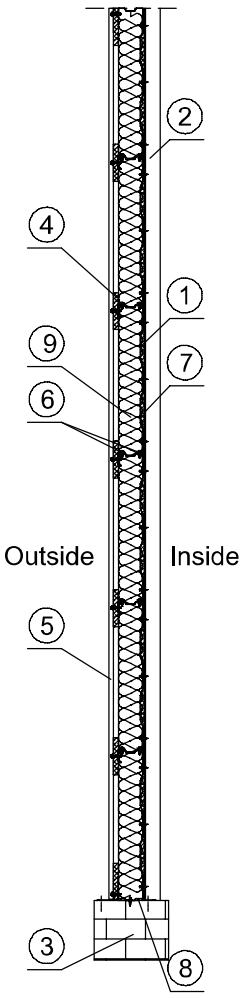

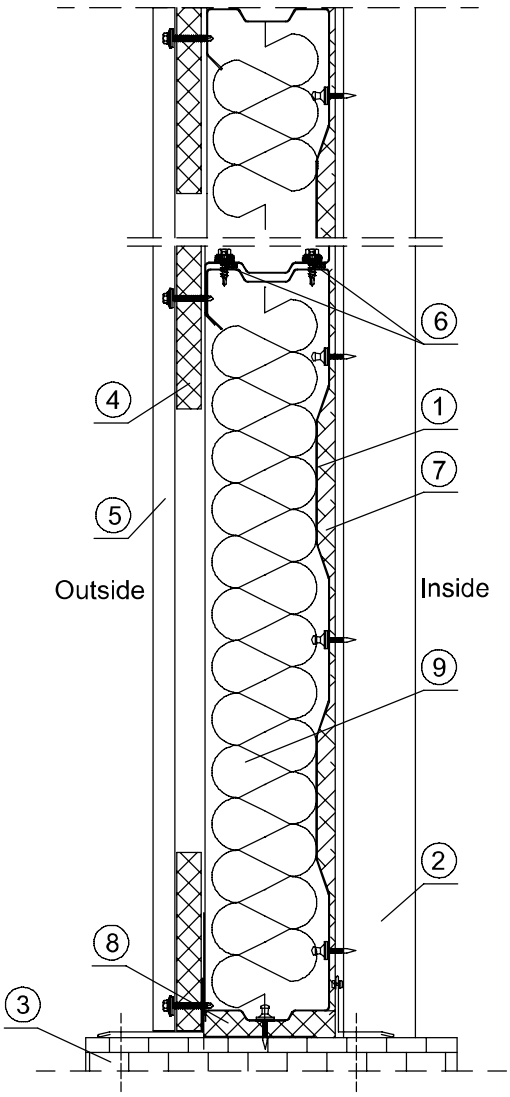

1. Liner tray LT100-600S.
2. Hot-rolled angle.
3. Foundation.
4. Insulation block hxt=100x19 mm.
5. Ruukki's profiled sheet.
6. Self-adhesive sealing tape PES 3x10 mm.
7. Self-adhesive sealing tape PUS 15x20 mm.
8. Impregnated polyurethane seal, thickness 20 mm.
9. Isover Aku-Płyta mineral glass wool, thickness 100 mm.

- **LT-09-04**
  Liner tray.
  Acoustic insulation Rw=33 dB.
  Absorbtion class A. Section.

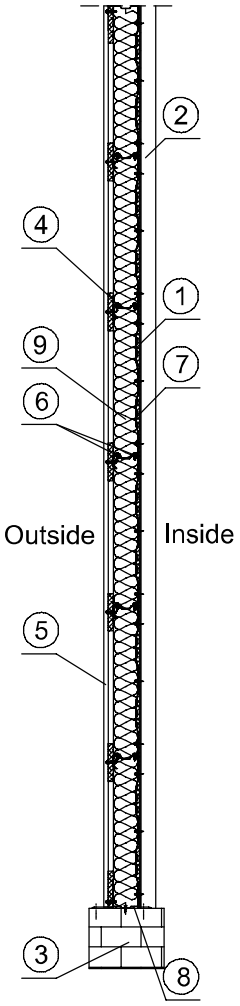

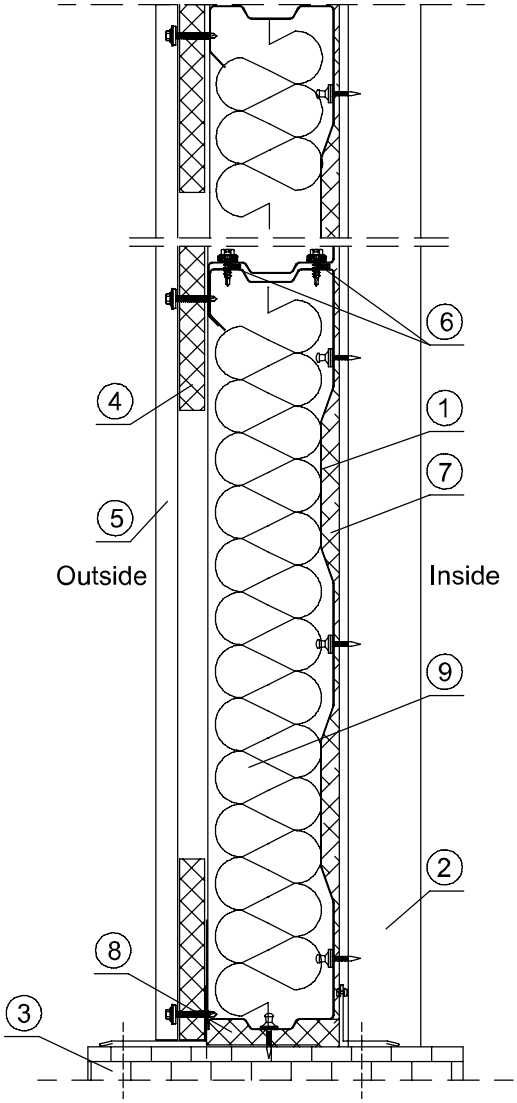

1. Liner tray LT100-600S.
2. Hot-rolled angle.
3. Foundation.
4. Insulation block hxt=100x19 mm.
5. Ruukki's profiled sheet.
6. Self-adhesive sealing tape PES 3x10 mm.
7. Self-adhesive sealing tape PUS 15x20 mm.
8. Impregnated polyurethane seal, thickness 20 mm.
9. Isover Super-Mata glass wool, thickness 100 mm.

- **Our sales representatives will be happy to give you more informations.**

Customer Service tel. +48 46 858 16 00, fax +48 46 858 16 09

Ruukki Polska Sp. z o.o., Jaktorowska 13, 96-300 Żyrardów, www.ruukki.com

Due to research works in progress and development of the proposed system
Ruukki Polska Sp. z o.o. reserves the right to modify and correct the hereby elaboration
without a prior notice. This catalogue does not constitute an offer as meant by the law.

Copyright @ 2008 Rautaruukki Corporation. All rights reserved. Ruukki is trademark of Rautaruukki Corporation.
Rautaruukki and More With Metals are registered trademarks of Rautaruukki Corporation.